CITY OF NORCO

WATER UTILITY SPECIFICATIONS AND STANDARDS

PUBLIC WORKS DEPARTMENT
2870 CLARK AVENUE
NORCO, CALIFORNIA 92860
(951) 270-5627

ALL DEVELOPERS, CONTRACTORS, AND OTHER INDIVIDUALS OR COMPANIES PREFORMING ANY WORK ON THE CITY OF NORCO WATER SYSTEM SHALL COMPLY WITH THESE SPECIFICATIONS. IT IS THEIR RESPONSIBILITY THAT THEY HAVE THE MOST CURRENT COPY BY CONTACTING THE PUBLIC WORKS DEPARTMENT.

APPROVED_____ DATE 12/6/16

CHAD BLAIS
DIRECTOR OF PUBLIC WORKS

INTRODUCTION

These Water Utility Specifications and Standards (Specifications) are to be used as a guide by Developers, Engineers, and Contractors in the design and installation of all additions, replacements, and modifications to the City of Norco's public water system. It is the intent that these Specifications will provide uniformity in materials and installation of piping, valves, fire hydrants, service laterals, meters, and other water system appurtenances. The Specifications shall also provide construction methods and controls to be used by contractors to construct, pressure test, disinfect and place in service all improvements and modifications to the City's public water system.

CITY OF NORCO

WATER UTILITY SPECIFICATIONS AND STANDARDS

TABLE OF CONTENTS

SECTION 1 - GENERAL
- 1-01 PLANS AND SPECIFICATIONS
- 1-02 DEFINITIONS
- 1-03 ABBREVIATIONS
- 1-04 LICENSES, PERMITS, AND FEES
- 1-05 INSPECTION
- 1-06 GUARANTEE

SECTION 2 - OPEN TRENCH OPERATIONS: EXCAVATION, BEDDING, BACKFILL, AND RESURFACING
- 2-01 OPEN TRENCH OPERATIONS
  - 2-01.01 Permits and Licenses
  - 2-01.02 Inspection
  - 2-01.03 Traffic Control
  - 2-01.04 Surveying
  - 2-01.05 Potholing
  - 2-01.06 Sheeting and Shoring
  - 2-01.07 Secured Trenches
  - 2-01.08 Tie-Ins
  - 2-01.09 Interruption of Water Service
- 2-02 TRENCH EXCAVATION
  - 2-02.01 Removal of Surface Improvements
  - 2-02.02 Abandoning Structures
  - 2-02.03 Protecting and Replacing Existing Structures
  - 2-02.04 Excess Excavated Material
- 2-03 TRENCH BEDDING
- 2-04 TRENCH BACKFILL
- 2-05 COMPACTION TESTS
- 2-06 TEMPORARY RESURFACING
- 2-07 TRENCH RESURFACING

SECTION 3 - BACKFLOW PREVENTION ASSEMBLIES AND FIRELINES
- 3-01 PUBLIC WATER SYSTEM PROTECTION
- 3-02 APPROVES BACKFLOW PREVENTION ASSEMBLIES
- 3-03 TESTING
- 3-04 LOCATION OF ASSEMBLIES
- 3-05 FIRELINES
- 3-06 PAINTING
- 3-07 AESTHETICS

SECTION 4 - MATERIALS
4-01 GENERAL
4-01.01 Protection of Metal Surfaces
4-02 DUCTILE IRON PIPE
4-02.01 Pipe Joints
4-02.02 Lining and Coating
4-02.03 Polyethylene Protective Wrapping
4-03 SPECIAL APPLICATIONS USING POLYVINYL CHLORIDE PIPE
4-03.01 Pipe Joints
4-03.02 Pipe Services and Appurtenances
4-03.03 Restrained Joint PVC Pipe
4-03.04 Installation of Curvature
4-03.05 Markings
4-03.06 Workmanship
4-03.07 Fittings for PVC Main Line
4-03.08 Tracer Wire and Warning Tape
4-04 THRUST RESTRAINING MATERIALS
4-04.01 Mechanical Joints
4-04.02 Flanged Adapters
4-04.03 Push-On Pipe Joints
4-04.04 Concrete
4-05 MAIN LINE COUPLINGS
4-06 SLEEVES AND CLAMPS
4-06.01 Tapping Sleeves
4-06.02 Repair Clamps
4-07 MAIN LINE PIPE FITTINGS
4-07.01 Mechanical Joints
4-07.02 Flanged Joints
4-07.03 Gaskets
4-07.04 Bolts and Nuts for Mechanical Joints and Flanged Fittings
4-08 MAIN LINE VALVES
4-08.01 General
4-08.02 Gate Valves
4-08.03 Butterfly Valves
4-08.04 End Connections and Gasket Materials
4-08.05 Combination Air Release Valves
4-08.06 Valve Can Assembly
4-09 FIRE HYDRANT ASSEMBLY
4-09.01 Materials
4-09.02 Hydrant Bury and Extensions (Spools)
4-09.03 Hydrant Protection
4-09.04 Hydrant Reflective Markers
4-10 SERVICE LATERAL INSTALLATION
4-10.01 Corporation Stops
4-10.02 Angle Meter Valves
4-10.03 Copper Tubing
4-10.04 Red Brass Pipe
4-10.05 Service Saddles
4-10.06 Meter Boxes
4-11 LARGE SERVICE INSTALLATION
4-11.01 Meter Assembly

4-11.02 Tapping Tees
4-11.03 Backflow Prevention Assemblies and Fire Lines
4-11.04 Guard Posts
4-12 METERS
4-12.01 Positive Displacement Types
4-12.02 Turbine Types
4-12.03 Compound Types
4-13 DEVIATION FROM SPECIFICATIONS
4-14 MATERIAL CERTIFICATIONS

SECTION 5 - INSTALLATION OF DUCTILE IRON AND PVC PIPE, VALVES, FITTINGS, FIRE HYDRANTS, AND APPURTENANCES
5-01 GENERAL
5-02 CONSTRUCTION MATERIALS
5-03 INSTALLING WATER MAIN PIPE
5-03.01 Laying Ductile Iron Pipe, Bends, and Fittings
5-03.02 Laying PVC (C900 & C905) Pipe
5-03.03 Cutting Pipe
5-03.04 Polyethylene Protective Wrapping
5-03.05 Protection of Metal Surfaces
5-03.06 Thrust Restraints
5-03.07 Flushing
5-04 VALVE BOX ASSEMBLY
5-05 FIRE HYDRANT ASSEMBLY
5-06 LARGE SERVICE LATERALS, BACKFLOW ASSEMBLIES, AND FIRE LINES
5-06.01 Meters
5-06.02 Backflow Assemblies
5-06.03 Fire Lines
5-07 SMALL SERVICE LATERALS
5-07.01 Backfill Compaction
5-07.02 Backflow Assemblies
5-08 CONNECTION TO THE EXISTING DISTRIBUTION SYSTEM
5-08.01 Pressure Tapping
5-08.02 Shutdown of Main
5-08.03 Transfer of Jurisdiction of Completed Work
5-09 ABANDONMENT OF EXISTING WATER MAINS, VALVES, AND APPURTENANCES
5-10 FIELD PAINTING
5-10.01 Surface Preparation
5-10.02 Primer Finished Coat

SECTION 6 - PIPELINE FLUSHING, HYDROSTATIC TESTING AND DISINFECTING
6-01 GENERAL REQUIREMENTS
6-02 TEMPORARY PIPING AND APPURTENANCES FOR FLUSHING, TESTING, AND DISINFECTING
6-03 FLUSHING
6-04 HYDROSTATIC PRESSURE TESTING
6-04.01 Preparation for Hydrostatic Test
6-04.02 Procedures for Hydrostatic Testing
6-04.03 Repetition of Hydrostatic Test

6-04.04 After Satisfactory Hydrostatic Test
6-05 DISINFECTING
6-05.01 Preparation for Disinfecting Pipe Lines
6-05.02 Forms of Chlorine for Disinfection
6-05.02.01 Calcium Hypochlorite Tablets
6-05.02.02 Calcium Hypochlorite (Granules)
6-05.02.03 Sodium Hypochlorite (Solution)
6-05.02.04 Liquid Chlorine Solution
6-05.03 Methods of Chlorination
6-05.03.01 Calcium Hypochlorite Tablets
6-05.03.02 Continuous Feed
6-05.04 Retention Period Required and Required Residual
6-05.05 Final Flushing
6-05.06 Bacteriological Tests
6-06 DISPOSAL OF TEST WATER
6-07 CONNECTING TO EXISTING DISTRIBUTION SYSTEM
6-08 REMOVAL OF TEMPORARY PIPING AND APPURTENANCES

SECTION 7 - SEPARATION OF WATER MAINS AND SANITARY SEWERS
7-01 BASIC SEPARATION STANDARDS
7-02 EXCEPTIONS TO BASIC SEPARATION STANDARDS
7-03 SPECIAL RESTRICTIONS
7-04 ALTERNATE CONSTRUCTION CRITERIA
7-05 CASE 1: NEW SEWER LINES BEING INSTALLED
7-06 CASE 2: NEW WATER MAINS BEING INSTALLED

SECTION 8 - REFERENCED CITY OF NORCO WATER STANDARD DRAWINGS
401 RESIDENTIAL STREET PIPE TRENCH BEDDING AND BACKFILL
402 ARTERIAL STREET PIPE TRENCH BEDDING AND BACKFILL
403 TRENCH PLATING
410 1” WATER SERVICE INSTALLATION
411 1” RESIDENTIAL FIRE / DOMESTIC SERVICE INSTALLATION
412 2” WATER SERVICE INSTALLATION
413 2” RESIDENTIAL FIRE / DOMESTIC SERVICE INSTALLATION
415 3” AND 4” METER INSTALLATION
416 4” THROUGH 12” SERVICE LATERALS AND NEW MAIN INSTALLATION
420 2” AND SMALLER SERVICE LATERAL ABANDONMENT
421 4” THROUGH 12” ABANDONMENT OF FITTINGS AND VALVES
430 STANDARD FIRE HYDRANT INSTALLATION
431 FIRE HYDRANT GUARD POST
440 2” BLOW-OFF ASSEMBLY
441 4” SAND BLOW-OFF ASSEMBLY
442 1” AND 2” COMBINATION AIR RELEASE VALVE ASSEMBLY
445 THRUST BLOCKS
450 ¾” TO 2” REDUCED PRESSURE BACKFLOW PREVENTION ASSEMBLY
451 FIRELINE DOUBLE CHECK DETECTOR ASSEMBLY
460 WATER QUALITY SAMPLING STATION
470 STANDARD VALVE BOX ASSEMBLY
471 STEEL VALVE STEM EXTENSION

SECTION 1 – GENERAL

1-01 PLANS AND SPECIFICATIONS

Construction of all water system improvements by contract and/or intended to be dedicated to the City of Norco will be governed by plans and specifications approved by the Director of Public Works. All work shall be in accordance with these plans and specifications and shall be inspected by the Public Works Department to insure conformity.

In cases of conflict of information, the following documents will have precedence in the order listed:

1. Special Provisions to the specifications and construction plans of the City of Norco.

2. Water construction plans approved by the City of Norco's Director of Public Works or his/her authorized representative.

3. Permits and licenses from affected agencies.

4. The City of Norco Public Works Department - Water Utility Specifications, herein called Specifications.

5. The applicable requirements of the Standard Specifications for Public Works Construction, "Green Book", as last revised, herein called Standard Specifications.

Conflicts and discrepancies noted by the Contractor shall be brought to the attention of the Director of Public Works or his authorized representative. Instructions will be given by the Engineer to provide a complete and satisfactory project. Unless otherwise determined by the Engineer, the most stringent/restrictive condition shall apply.

Provisions of reference specifications and publications of any scientific or technical society or other organization noted in these specifications and plans shall have the same effect as if written herein, unless expressly modified by these specifications. Any reference specification or publication in the absence of designation to the contrary, shall be understood to refer to the latest revision of the specification, standard, method, or publication as of the date of the beginning of the work.

1-02 DEFINITIONS

a.	City or Engineer	The Director of Public Works of the City of Norco, or his/her authorized representative.
b.	Owner/Developer	The person or organization having legal responsibility for construction of water system improvements in conjunction with development of property.
c.	Contractor	The individual, partnership, corporation, joint venture, or other legal entity having a contract with the City to perform the construction of water system improvements. In the case of improvements being done under a permit issued by the City, the party that is issued the permit shall be construed to be the Contractor.
d.	Superintendent	The field representative of the Contractor, present at the job site at all times during work, which is authorized to receive and fulfill instruction from the City.
e.	Consultant	The agent of the Developer or independent engineer who has responsibility for the design and drawing of construction documents.
f.	Or approved equal	A product equivalent to that specified in these water utility standard specifications and approved by the Public Works Department before start of construction. No approved equal product is intended, unless so stated in these specifications.
g.	Plans	Those drawings accompanying the specifications that show the location, nature, extent and form of the work, together with applicable details.
h.	Water Supplier	The City of Norco who owns and operates the City's public water system.
i.	Regulatory Agency	State Water Resources Control Board (SWRCB), Division of Drinking Water (DDW).

1-03 ABBREVIATIONS

Whenever the following abbreviations are used in these specifications, the meaning shall be interpreted as follows:

a.	ANSI	American National Standards Institute
b.	ASTM	American Society for Testing and Materials
c.	AWWA	American Water Works Association
d.	CAL/OSHA	Division of Industrial Safety of the State of California
e.	DIPRA	Ductile Iron Pipe Research Association
f.	FM	Factory Mutual research
g.	NSF	National Sanitation Foundation
h.	SWRCB	State Water Resources Control Board
i.	UL	Underwriter's Laboratory
j.	W.A.T.C.H	Work Area Traffic Control Handbook

1-04 LICENSES, PERMITS, AND FEES

The Contractor shall have a Class "A" General Engineering Contractor's License valid in the State of California and shall meet all the applicable requirements of the Norco Municipal Code.

The Contractor and/or Developer shall obtain all necessary permits, licenses, or agreements required by any legally constituted agencies, pay all fees, and give all necessary notices required for the construction of the work.

Prior to beginning any work, a water permit and an encroachment permit from the Public Works Department including any required deposits and bonds, are required for excavation in the public right-of-way within the City of Norco. Pavement repair shall be made by a licensed paving contractor and shall conform to these Specifications and the Standard Specifications. The contractor is responsible for all costs associated with the work performed, including any corrections or repairs. In the event the Contractor fails to complete the work or make any required corrections/repairs, any and all costs incurred by the City will be deducted from the deposit or the surety will be billed for these expenses. Said deposit or bond shall be retained by the City for payment and for material and labor.

Before the Contractor or any sub contractor performs work, it shall be necessary for each company to obtain a business license from the City of Norco Fiscal and Support Services Department.

1-05 INSPECTION

The construction of any water system improvement intended for dedication to the City and used for public water service shall be subject to inspection and approval/acceptance by the City. Such inspection will assure that all phases of the work are in compliance with these Specifications. The City's designated inspector will be the representative selected by the Engineer and shall coordinate the various responsibilities of the Public Works Department throughout the work. Contractor shall schedule pre-construction meeting with the Public Works Department a minimum of 48 hours prior to construction. Inspection costs will be paid by the Developer at the rate or fee prescribed by City Council resolution.

The inspector shall have access to the work area and shall be furnished every reasonable facility for ascertaining full knowledge of the progress, material, and workmanship used to complete the work. The Contractor shall provide at least 24 hours advance notice of major phases of construction for purposes of inspection. All material shall be approved prior to placement and all water system works shall be visually inspected prior to backfilling.

The Engineer shall have the authority to suspend the work wholly, or in part, for such time as it may deem necessary due to failure of the Contractor to perform any provisions of the plans or specifications. The work may only continue when the defective material or construction method is recognized as corrected by the Engineer.

1-06 GUARANTEE

The Contractor shall guarantee the work against defective material or workmanship for a period of one year from the date of completion of the contract and/or acceptance of the work by the City. Damage due to acts of God or from sabotage and/or vandalism is specifically exempted from the guarantee. When defective materials and/or workmanship are discovered which requires repairs to be made under this guarantee, all such works shall be done by the Contractor at his own expense and shall begin within five working days after written notice of such defects has been given to him/her by the City. Should the Contractor fail to repair such defective materials or workmanship within five working days thereafter, the City may cause the necessary repairs to be made and charge the Contractor with the actual cost of all labor and materials required.

In emergencies demanding immediate attention, the City shall have the right to repair the defects and charge the contractor with the actual cost of all labor and materials required. Any repair works preformed as herein specified shall be done under the provisions of the original work specifications.

SECTION 2 – OPEN TRENCH OPERATIONS: EXCAVATION, BEDDING, BACKFILL AND RESURFACING

2-01 OPEN TRENCH OPERATIONS

Unless specified differently on the plans or as supplemented herein, open trench operations, excavation, bedding, backfill, and resurfacing shall conform to the applicable requirements of Section 306-1 of the Standard Specifications and City of Norco Standard Drawings 401, 402 and 403.

2-01.01 Permits and Licenses

See section 1-04 of these Specifications for permit and license requirements.

2-01.02 Inspection

See section 1-05 of these Specifications for inspection requirements.

2-01.03 Traffic Control

The Contractor shall conduct his operations to cause the least possible obstruction to traffic inconvenience to the public. On arterial highways, lane closures require a traffic control plan completed by a registered civil or traffic engineer subject to approval from the Engineer. Lane closures are restricted to the hours between 8:30 a.m. and 3:30 p.m. At least one lane of traffic must be maintained in each direction between these hours. All traffic lanes shall be open to traffic during all other hours. On minor residential streets, one lane of traffic shall be maintained for each direction at all times. If two travel lanes cannot be maintained, the roadway may be reduced to one 14-foot-wide lane between the hours of 8:00 a.m. and 4:00 p.m. Adequate flagmen, no less than two, whose sole duties shall consist of directing traffic, shall be provided at such times as the street is restricted to one lane of traffic. At least one 14-foot-wide lane controlled by flagmen shall be provided on all intersecting minor streets. A separate permit is required from the Public Works Department for all work in public streets.

The Engineer reserves the right to alter the above traffic conditions as required during construction.

The Contractor shall be required to provide and maintain all barricade delineators, flashers, signs, including temporary “No Parking” signs’ and other safety equipment as set forth in the latest edition of Caltrans “California Manual on Uniform Traffic Control Devices” (CA MUTCD) and the Work Area Traffic Control Handbook” (W.A.T.C.H). All necessary traffic control devices shall be in place prior to the start of work.

On all designated or striped Bicycle Routes the Contractor shall install standard warning signs per the WATCH Manual at locations approved by the Engineer.

Where traffic must cross open trenches, the Contractor shall provide suitable bridges at street intersections and driveways. Hydrants under pressure, valve pit covers, valve boxes, meter boxes, fire or police call boxes, or other utility controls shall be left unobstructed and accessible during the construction period.

2-01.04 Surveying

The contractor shall provide equipment, methods, and labor to accurately locate all proposed water facilities in accordance with Section 2-9 of the Standard Specifications and as modified herein. The Contractor shall guaranty the accuracy by constructing curb and gutter prior to the beginning of any water improvements in new developments or where the installation of curb and gutter is included as part of the work scope. The Contractor shall also be responsible for the preservation of existing survey monuments.

2-01.05 Potholing

The plans show the position of pipes, conduits, poles and other structures as they are believed to exist. The contractor, before commencing any excavation shall determine from records, potholing, uncovering, or otherwise, the existence, exact position, and ownership of these or other facilities. It is the Contractor's responsibility to protect any pipes, conduits, poles, or any other existing improvements.

Potholing shall be done a minimum of 10 working days in advance of commencing any excavation and sub-structure information forwarded to the Engineer for review.

2-01.06 Sheeting and Shoring

All trench excavations shall be adequately secured to provide safe working conditions, and protection to adjacent facilities and structures. The contractor shall comply with all rules, regulations, and orders of Occupational Safety and Health Administration (OSHA).

Prior to any trench excavation where the depth of trench is greater than five feet, the Contractor shall submit to the Engineer a detailed shoring plan prepared, stamped and signed by a Civil or Structural Engineer registered in the State of California. The shoring plan shall show the design of shoring, bracing, sloping, or other provisions to be made for the workers' protection from the hazard of trench failure. Excavation shall not begin until the Engineer has accepted the plan and received a copy of the OSHA permit.

Sheeting and shoring shall not place any undue strains on existing utilities or structures, nor on completed sections of construction. Sheeting and shoring may be removed during backfilling, provided adequate protection is provided at all times. The Contractor shall be responsible for any damages to existing utilities or structures due to placement, removal or failure of any sheeting and/or shoring system. The Contractor shall repair or have repaired any damages as soon as practical.

2-01.07 Secured Trenches

Pipe trenches or other large excavations shall be backfilled or securely covered at the close of each working day, to the satisfaction of the Engineer. The Contractor shall fence any trench excavations that are necessary to be left open at night. Any trench that is left open shall be permitted only upon review and approval by the Engineer.

Covering of trenches with steel traffic plates shall be done in accordance with City of Norco Specifications and as directed by the Engineer. All steel plate covers shall be skid resistant (X-plates only) and shall be installed flush with adjacent pavement in accordance with City of Norco Standard Drawing 403. For equestrian trails, all trenches must be secured with X-plates and covered in 3” of decomposed granite.

No backfill material or construction equipment may be stored on any City street without prior approval from the Engineer.

2-01.08 Tie-Ins

All tie-ins shall be excavated one working day in advance and covered with traffic plates or as required by the Engineer.

2-01.09 Interruption of Water Service

No valve or other control on the existing water system shall be operated for any purposes by the Contractor without approval of the Engineer. All consumers affected by such operation shall be given a notice letter at least two working days before the operation advising of water service outage and the probable time when service will be restored. All such service interruption notices shall be prepared and distributed by the City to ensure proper notification is completed.

2-02 TRENCH EXCAVATION

Unless specified differently on the plans or as supplemented herein, trench excavation shall be in accordance with the details shown in the City of Norco Standard Drawings 401 and 402 and in accordance with Section 306-1.1 of the Standard Specifications.

The maximum length of open trench shall be the distance of pipe installed in one day. Shorter lengths of open trench may be necessary and may be ordered by the Engineer to meet traffic, weather, and other safety requirements.

In areas of new development, water main installation will not be permitted until the sub grade is established and the storm drain and sewer installation has been completed. Pipe shall be placed to the grade and depth specified on the plans. When not specified, pipe shall have a 42 to 48 inch cover from finished grade.

2-02.01 Removal of Surface Improvements

Unless specified differently on the plans or supplemented herein, bituminous pavement, concrete pavement, curbs, sidewalks, or driveways removed in connection with construction shall be removed in accordance with City of Norco Standard Drawings 401 and 402 and Section 306-1.1.5 of the Standard Specifications.

If the width of the remaining pavement between the final saw cut edge of the trench and the edge of the gutter is less than 36 inches, removal and new pavement shall extend to the edge of gutter.

Concrete sidewalk removal done in connection with water system work shall be saw cut to the nearest score marks. Concrete curbs, gutters and cross gutters shall be tunneled whenever possible. With prior approval of the Engineer, the concrete may be saw cut in such a manner in which there shall not be less than six feet to the nearest cold joint or expansion joint.

2-02.02 Abandoning Structures (non-potable water related)

Whenever existing pipes, culverts, or conduits are cut and abandoned, their open ends shall be securely closed by a redwood plug, a solid mechanical cap, a wall of concrete no less than six inches thick, or as directed by the Engineer.

2-02.03 Protecting and Replacing Existing Structures

Insofar as practicable during the progress of the work, the property of any owner of a public utility or pole line, pipeline, sewer, culvert, cable, conduit, or storm drain, in-line structures, or lateral and services, or any other structures, or improvements, and all fences shall not be disturbed but shall be maintained in good operating condition at the expense of the Contractor. These requirements shall apply to all structures and improvements both inside and outside the right-of-way provided by the City. Wherever in the judgment of the Contractor, the economical performance of the work requires a temporary or permanent removal of any of the property named above in this section, the Contractor shall make arrangements with the owner of the same for its temporary or permanent removal, or for other changes that may be necessary in order to perform the work more readily. All expense of maintenance, removal reconstruction, and repair of said property shall be borne by the Contractor.

Whenever the Contractor makes agreements with owners for the removal and restoration of said property, the materials furnished and the methods of making such removal and restoration shall be satisfactory to the owner and the Engineer. In the event the Contractor disturbs, disconnects, or damages any of said property prior to making the necessary arrangements with the owners thereof, the Contractor shall immediately give notice to the property owner and the Contractor shall assume all responsibilities connected therewith. All property removed shall be reconstructed or restored promptly as is reasonably possible in approximately its original location and in

condition as good as when removed and subject to the inspection of the owners or governing body having jurisdiction over same.

2-02.04 Excess Excavating Material

All excavated materials in excess of that required in the finished work shall immediately be hauled away and disposed of at a legally permitted site. The Contractor shall be responsible for all damages and claims that may arise from the disposal of the excess material. The contractor shall provide a signed release from the property owner.

2-03 TRENCH BEDDING

Unless specified differently on the plans or as supplemented herein, trench bedding shall be placed in accordance with the requirement shown in City of Norco Standard Drawings 401 and 402 and in accordance with Section 306-1.2.1 of the Standard Specifications.

For water main installations, the pipe zone referenced in City of Norco Standard Drawings 401 and 402, Bedding B material shall be substituted for Bedding A material. Jetting of trench bedding may be permitted, subject to the approval of the Engineer.

2-04 TRENCH BACKFILL

Unless specified differently on the plans or as supplemented herein, trench backfill shall be placed in accordance with the requirements shown in City of Norco Standard Drawings 401 and 402 and in accordance with Section 306-1.3 of the Standard Specifications.

The Contractor shall compact the trench backfill material to the bottom of the structural section within one day after installation of the pipe. No flooding or jetting of the backfill will be allowed to achieve compaction without prior approval by the Engineer.

If the Engineer determines that the Contractor is not able to obtain the required compaction in areas under curbs, cross gutters or other structures, trench backfill underneath these structures shall be 1-sack cement sand slurry or as specified by the Engineer.

2-05 COMPACTION TEST

Unless determined otherwise, compaction tests will be taken along the pipelines, in the pipe zone, above the pipe zone, and at ground surface or subgrade at 200 foot intervals or less, or as directed by Engineer, and along all large service and fire hydrant laterals. The Engineer must be present when compaction tests are taken.

2-06 TEMPORARY RESURFACING

Unless permanent resurfacing is to be placed immediately, temporary bituminous resurfacing, a minimum of two inches thick or as otherwise specified, shall be placed and properly maintained by the Contractor as determined by the Engineer.

Temporary resurfacing shall be placed in accordance with Section 306-1.5.1 of the Standard Specifications and shall be placed as soon as trench backfill is complete and shall remain in place until permanent resurfacing is placed. Prior to permanent resurfacing, temporary resurfacing shall be removed and discarded at a legal disposal site at Contractor's expense. Temporary asphalt paving as specified above shall be a minimum two inches thick or as specified by the Engineer.

At the end of each day, temporary striping shall be placed complying with the plans, as specified or as directed by the Engineer. Temporary striping shall conform to Section 214 of the Standard Specifications.

2-07 TRENCH RESURFACING

Unless specified differently on the plans or supplemented herein, trench resurfacing shall be placed in accordance with the requirements shown in the City of Norco Standard Drawings 401 and 402 and in accordance with Section 306-1.5.2 of the Standard Specifications.

Contractor shall place structural section other than surface course within five days of completion of backfill.

Concrete sidewalks, curbs and gutters, driveways and other structures shall be replaced in accordance with the applicable requirements in the Standard Specifications and the City of Norco Standard Drawings.

SECTION 3 – BACKFLOW PREVENTION ASSEMBLIES AND FIRELINES

3-01 PUBLIC WATER SYSTEM PROTECTION

All water services, other than residential, connected to the public water system shall be required to include an approved backflow prevention assembly; the type and size to be designated by the Engineer. Certain types of residential services may be required to have an approved backflow prevention assembly. The type of protection approved shall be based on the existing or potential degree of hazard that exists on the user's premises, in the opinion of the Engineer. All backflow devices at a minimum must match size of the service lateral.

3-02 APPROVED BACKFLOW PREVENTION ASSEMBLIES

Approved manufactures/models of backflow prevention assemblies, including fire lines as mentioned elsewhere in this Section, are those approved by the University of Southern California's Foundation for Cross-Connection Control and Hydraulic Research (USC's Foundation). Contact USC's Foundation for a list of approved assemblies.

Three-inch and larger approved backflow prevention assemblies, including fire lines, have two gate valves and four test cocks. As the gate valves are part of the unit (assembly) approved by USC's Foundation, the gate valves do not have to meet the requirements, including manufacturer, of Section 4-08 of these Specifications. Gate valves for fire lines must be of the OS&Y type with rising stems and tamper switches.

Three-inch and larger backflow assemblies, other than fire lines, shall be installed in conformance with City of Norco Standard Drawings 415. Two-inch and smaller backflow assemblies, other than fire lines, shall be installed in conformance with City of Norco Standard Drawing 450.

3-03 TESTING

The Owner/Developer or Contractor shall be responsible for the installation, initial test and certification of all new backflow prevention assemblies. Thereafter, backflow prevention assemblies will be maintained and tested annually by the owner or water user. All testing shall be done by a certified backflow device tester as approved by the County of Riverside Public Health. Contact the County of Riverside Public Health for a list of certified testers.

3-04 LOCATION OF ASSEMBLIES

Backflow prevention assemblies shall be located as close as practical to the meter, a minimum 12 inches behind the property line and subject to approval by the Engineer. The assemblies shall be at least 12 inches from walls, buildings, obstructions, or other devices, readily accessible for testing, maintenance, and repairs. The lowest part of any reduced pressure principle backflow assembly shall be installed between 12 and 18 inches above finished grade. The above ground horizontal run segment of a backflow assembly shall be installed in a level position.

Backflow prevention devices shall be installed at locations other than immediately behind the water meter when required by law or when determined by the Water Utility Division and regulatory agency that such additional devices are necessary to adequately protect the water supply.

There shall be no connections between the meter and the backflow assembly.

3-05 FIRELINES

All fire lines shall require a detector meter (by-pass meter) and backflow protection as determined by the Public Works Department. The standard fire line shall have a double check detector backflow assembly. When a higher degree of hazard exists, a reduced pressure principle detector backflow assembly is required. All fire lines shall be installed in conformance with City of Norco Standard Drawings 416 and 451.

The detector (by-pass) meter shall be 5/8 inch or 3/4 inch nominal size with bronze main case and bottom plate, and shall have a straight read magnetic drive register capable of detecting consumptive use in cubic foot increments. The City of Norco will provide the appropriate detector meter.

The above ground horizontal run segment of a fire line assembly shall be installed in a level position.

3-06 PAINTING

See Section 5-10 of these Specifications for painting requirements for all backflow prevention assemblies, fire lines, and fire department connections.

3-07 AESTHETICS

The Owner/Developer is encouraged to locate all above ground large services, backflow prevention assemblies, and fire lines in a manner that is aesthetically pleasing. If a method of concealment is used, it shall not obscure the City of Norco Fire Department pumper connection, OS&Y rising stems, hinder access to the connection, or obscure the testing of the device.

SECTION 4 – MATERIALS

4-01 GENERAL

All materials and equipment installed in City of Norco's water system shall meet all state and federal standards, as well as standards developed by nationally recognized organizations such as AWWA, ANSI and NSF. In order to protect human health, all materials, chemicals, lubricants, and products in contact with drinking water shall be tested and certified as meeting NSF/ANSI Standard 60 (Drinking Water Treatment Chemicals-Health Effects) and NSF/ANSI Standard 61 (Drinking Water System Components-Health Effects).

In addition, all materials coming in contact with potable water shall be lead-free per California Health & Safety Code Section 116875. All materials are required to be certified as lead-free by NSF or other ANSI accredited certifier per SB 1334.

4-01.01 Protection of Metal Surfaces

All buried metal surfaces on valves, flanges, bolts, nuts, tie rods, turn buckles, restraint devices, couplings, and other appurtenances in contact with the earth and backfill materials shall be coated with a minimum 30 mils of JS160H Mastic manufactured by Protecto Wrap Co., 30 mils of Bituminous Mastic 50-HT by Utility Coating Company, or approved equal. In addition to this coating, all metal surfaces as previously described, shall be encased in 8 mils polyethylene protective wrapping and tape wrapped to the pipe barrel in accordance with AWWA C-105 and Sections 4-02.03 and 5-03.04 of these Specifications.

4-02 DUCTILE IRON PIPE

Ductile iron pipe shall conform to the requirements of AWWA Standard C151. Unless otherwise specified, size 4 inch through 12 inch shall be Pressure Class 350. Pipes greater than 12 inch and up to 24 inch in diameter shall be Thickness Class 52. Pipes larger than 24 inches in diameter and all above ground pipes shall be Thickness Class 53. Special order pipe sizes, such as 10 inch and 14 inch, are not allowed unless otherwise authorized by the Public Works Department.

4-02.01 Pipe Joints

Ductile iron pipe shall be furnished in 18 foot nominal laying lengths and shall be bell and spigot type having a push-on joint employing a single rubber gasket, made of EPDM, to effect the joint seal, in accordance with AWWA Standard C111 , as manufactured by "TYTON®" from U.S Pipe, "FASTITE®" from AMERICAN Pipe or approved equal.

Where restrained joints are indicated on the plans or on Standard Drawings, push-on joints shall be restrained in accordance with the requirements of Section 4-01.06 of these Specifications.

4-02.02 Lining and Coating

All ductile iron pipes and fittings shall be factory cement mortar lined with seal coat in accordance with AWWA Standard C104, “Cement-Mortar Lining for Ductile-Iron Pipe and Fittings for Water”, and coated with bituminous material as specified in AWWA C151. Mortar lining of pipe or fittings in the field is not permitted.

4-02.03 Polyethylene Protective Wrapping

All buried ductile iron and gray iron pipes and fittings shall be polyethylene wrapped. Polyethylene protective wrapping (“Polywrap”) shall conform to the requirements of ANSI/AWWA Standard C105/A21.5, “Polyethylene Encasement for Ductile-Iron Pipe Systems”, and be 8 mils thick (minimum) tubing of virgin polyethylene, as manufactured by Dupont Alathon, U.S.1. Petrothene resin, or approved equal.

Tubing shall be taped and secured with general purpose polyethylene tape, 2 inches wide and 10 mils thick as manufactured by Scotchrap No. 50, Plicoflex No. 340, Protecto Wrap No. 200, Polyken No. 900, or approved equal.

4-03 SPECIAL APPLICATIONS USING POLYVINYL CHLORIDE PIPE

At the sole discretion of the Public Works Department, polyvinyl chloride (PVC) pipe material for distribution main may be used. PVC Pipe shall be Pressure Class 235 (DR 18), unless otherwise specified, conforming to the requirements of AWWA Standard C900 “Polyvinyl Chloride (PVC) Pressure Pipe and Fabricated Fittings, 4 inch through 12 inch, for Water Transmission and Distribution” or C905 “Polyvinyl Chloride (PVC) Pressure Pipe and Fabricated Fittings, 14 inch Through 48 inch” for pipe sizes larger than 12 inches in diameter.

4-03.01 Pipe Joints

PVC shall be furnished in 20 foot nominal laying lengths and have bell-end push-on joints employing a single elastomeric gasket in accordance with AWWA Standard C900 and C905.

4-03.02 Pipe Services and Appurtenances

All service saddles, sleeves, fittings, restraining devices, and other appurtenances used on PVC Pipe shall be approved by the Public Works Department prior to use.

4-03.03 Restrained Joint PVC Pipe

Restrained joint non-metallic couplings for PVC pipe shall be CERTALOK™ C900 RJIB system manufactured by CertainTeed Corporation, Eagle LOC 900 manufactured by JM Pipe, or approved equal.

See Section 4-04 for additional thrust restraint system for PVC pipe.

4-03.04 Installation of Curvature

Where the pipeline in non-restrained joint and to be installed in a curved alignment, the radius of curvature and specific alignment shall be shown on the plans and shall be accomplished by means of deflecting the pipeline at the joints with couplings. Couplings used in a curved alignment, where required deflection is between one and five degrees, shall be High Deflection Couplings, Class 305 manufactured by CertainTeed Corporation, or approved equal.

Contractor shall not exceed the manufacturer's recommendation for deflection for the couplings. Bending of the PVC is not allowed.

4-03.05 Markings

PVC Pipe shall be legible and permanently marked in ink with the following information.

- Manufacturer and Trade Name
- Nominal Size and DR Rating/Pressure Class
- Hydrostatic Proof Test Pressure
- [NSF-61]
- Manufacturing Date Code

4-03.06 Workmanship

The beveled end of any PVC pipe shall be cut off before the pipe is inserted into a mechanical joint fitting.

4-03.07 Fittings for PVC Main Line

Main line PVC pipe fittings shall be as called for on the construction plans. All fittings shall be ductile iron fittings per Section 4-07.

4-03.08 Tracer Wire and Warning Tape

Copper tracer wire and warning tape shall be installed per Section 5-03.02.

4-04 THRUST RESTRAINING MATERIALS

All mechanical thrust restraining devices shall be ductile iron except as noted for FIELD LOK gaskets. All devices shall withstand a working pressure of at least 250 psi with minimum safety factor of 2.

4-04.01 Mechanical Joints

Restraining devices for mechanical joint fittings shall be incorporated with the design of a follower gland and grip ring restraining mechanism that utilizes contact with entire circumference of pipe for restraint. The ring shall flex to accommodate deflection allowed in a mechanical joint after burial. If the mechanism is not available in the specified O.D., a similar wedge action

restraint utilizing partial contact with circumference of pipe shall be used. Glands shall be manufactured of ductile iron conforming to ASTM A536.

Approved Mechanical Joint Restraining System Manufactures For 4”-12”

Romac Industries, Inc.	GripRing ™ (PVC or DIP)
Ford Meter Box Co., Inc.	Uni-Flange Block Buster™ 1300 (PVC or DIP)

Approved Mechanical Joint Restraining System Manufactures For 14”-48”

Romac Industries, Inc.	Romagrip™ (PVC or DIP)
EBAA IRON, Inc.	Megalug Series 1100(DIP), 2000 (PVC)
Smith-Blair	Cam-Lock ™ (PVC or DIP)
Ford Meter Box Co., Inc.	Uni-Flange Block Buster™ 1300 (PVC or DIP)

4-04.02 Flanged Adapters

Flange adapters shall be fully restrained wedge activated type with a minimum working pressure of 250 psi and a safety factor of 2. Outside and inside surfaces of flange adapters shall be epoxy coated.

Flange Adapters shall be manufactured from ductile iron per ASTM A536 and shall have bolt circles and bolt holes to meet ANSI B16.1 – Class 125 or Class 250 if required and shown on the plans.

Approved Flange Adapter Manufacturers

EBAA IRON, Inc.	Megaflange™ Series 2100(PVC or DIP)
Romac Industries, Inc.	Field Flange™ (DIP)
Ford Meter Box Co., Inc.	Uni-Flange 900 - Adapter Flange (PVC)
	Uni-Flange 400 - Adapter Flange (DIP)
Smith-Blair	Flange-Lock™ (PVC or DIP)

4-04.03 Push-On Pipe Joints

Where restrained joints are indicated on the plans, push-on TYTON® joints shall be restrained with “Field-Lok” gaskets as manufactured by U.S Pipe, and FASTITE® joints shall be restrained with “Fast-Grip” gaskets from AMERICAN Pipe or approved equal.

Restrained joint pipe is an acceptable option for restraint of push-on joint pipe. Restrained push-on joint pipe and fittings shall be capable of being deflected after assembly.

Approved Restrained Pipe Manufacturers

U.S Pipe	‘TR-Flex”
American Pipe	“Flex-Ring”
Pacific States Cast Iron Pipe Co.	Thrust-Lock™

4-04.04 Concrete

Concrete thrust blocks shall be Class 520-C-2500 concrete. If thrust block is to be disturbed or backfill is to be placed prior to developing its required strength, additional thrust restraining methods approved by the Engineer shall be installed. Concrete chemical accelerating admixtures, such as calcium chloride, are not allowed unless approved by the Engineer.

4-05 MAIN LINE COUPLINGS

Sleeve-type couplings shall provide a flexible, watertight connection between two plain ends of pipe as shown on the construction plans or as directed by Engineer. For ductile iron and gray iron pipe, all couplings shall be ductile iron solid sleeve type conforming to AWWA C110, with mechanical joint ends and long body no less than 12 inches.

For steel, all couplings shall be standard steel couplings, with body no less than seven inches long. Bolts for exposed steel couplings shall be hot-dip galvanized. Bolts for buried steel couplings shall be Type 316 stainless steel. The Contractor shall strictly follow the torque limitations and shall use N-5000 Loctite® anti-seize/rust preventer lubricant manufactured by the Henkel Company, or approved equal. All sleeve type steel couplings shall be fusion bonded epoxy lined and coated with Scotchkote 6233, as manufactured by 3M/Corrosion Protection Products, or approved equal.

Buried metal surfaces shall receive additional protective coating and wrapping after they are assembled as per Section 4-01.01.

Approved Sleeve-Type Couplings for Ductile Iron, Cast Iron and PVC Pipe

Clow®	MJ Solid Long Sleeves
Tyler Corporation	5-144L Long Solid Sleeves
Romac Industries, Inc.	RFCA or PVS-RFCA
Krausz Industries	Hymax
Smith Blair	Top Bolt 421

Approved Flexible Couplings for Steel Pipe

Smith Blair, Inc.	411 Steel Couplings
Smith Blair, Inc.	421
Smith Blair, Inc.	Quantum® Coupling Wide-Range
Romac Industries, Inc.	Model XR501
Krausz Industries	Hymax

Approved Flexible Couplings for Transition to Belgian Cast Iron Pipe

Smith Blair, Inc.	OMNI 441 Ductile Iron Couplings
Smith Blair, Inc.	421
Smith Blair, Inc.	Quantum® Coupling Wide-Range
Romac Industries, Inc.	Macro HP
Krausz Industries	Hymax

4-06 SLEEVES AND CLAMPS

4-06.01 Tapping Sleeves

Tapping sleeves shall have a stainless steel body with removable bolts. The outlet, body, flange, bolts and nuts shall be 18-8 type 304 stainless steel. All welds shall be fully passivated to restore stainless characteristics. Flange shall conform to AWWA Standard C207, “Steel Pipe Flanges for Waterworks Service-Sizes 4 Inch through 144 Inch”, Class D ANSI 150 lb. with drilling recessed to accept standard tapping valves per MSS-SP 60. Bolt holes shall straddle pipe centerline. Shell gasket shall seal the full circumference of the pipe.

Approved Stainless Steel Tapping Sleeve Manufactures	
Ford Meter Box Company, Inc.	FTSS
JCM	Model 432
Power Seal	Model 3480
Romac Industries, Inc.	SST III
Smith Blair	Model 238

4-06.02 Repair Clamps

Repair clamps shall have a full circle (one-section) band with removable drop-in bolts. The band shall be 18-8 type 304 stainless steel. Bolts, washers and nuts shall be high strength, low alloy steel per ASTM A242 and AWWA C111. Clamp shall have a lap type EPDM gasket with molded tapered ends to provide equalized sealing at the lap joint on any pipe within the clamps’ range. The clamps shall have a built-in outside diameter (O.D.) range that fits several pipe-outside diameters within the clamp’s nominal pipe size range.

Approved Stainless Steel Repair Clamp Manufactures	
Ford Meter Box Company, Inc.	F1
Romac Industries, Inc.	CL1
Smith Blair, Inc.	226
Krausz Industries	Hymax

4-07 MAIN LINE PIPE FITTINGS

Main line pipe fittings shall be supplied in accordance with AWWA Standard C110, “Ductile-Iron and Gray-Iron Fittings, 3 inch through 48 inch for Water and Other Liquids”. Short body type fittings conforming to AWWA Standard C153 “Ductile-Iron Compact Fittings 3 inch through 24 inch for Water Service” may be used. All fittings shall have mechanical joints unless otherwise specified. All fittings shall be made of ductile iron. Fittings up to 24 inch size shall be 350 psi pressure ratings and over 24 inch size shall be 150 psi pressure rating. Fittings shall be cement mortar lined in accordance with AWWA Standard C104, ‘Cement Mortar Lining for Ductile – Iron Pipe and Fittings for Water.” Fittings shall be coated with a bituminous material as specified in AWWA Standard C151.

4-07.01 Mechanical Joints

Mechanical Joints shall conform to the requirements of AWWA Standard C111, “Rubber-Gasket Joints for Ductile Iron Pressure Pipe and Fittings.”

4-07.02 Flanged Joints

Flanged fittings shall conform to the requirements of AWWA C110 or C153. Flanges shall be drilled to ANSI B16.1, 125lb. standard bolt template. The 250 lb. Flanges, when required, shall be drilled to ANSI B16.1, 250 lb. standard bolt template.

4-07.03 Gaskets

Gaskets for flanged joints shall be made of EPDM rubber, either ring or full-faced, and ⅛ inch thick, bolt holes pre-punched, conforming to the requirements of AWWA C111 and ANSI B16.32. Whenever blind flanges are shown, the gasket shall consist of ⅛ inch thick synthetic rubber that shall cover the entire inside surface of the blind flange and shall be cemented to the surface of the blind flange.

4-07.04 Bolts and Nuts for Mechanical Joints and Flanged Fittings

Tee-head bolts and hexagonal nuts for all mechanical joints shall be high strength, low alloy steel, meeting the current provisions of ANSI/AWWA 0111/A21.11 Standard “Rubber-Gasket Joints for Ductile Iron Pressure Pipe and Fittings,” and must be Cor-Ten as manufactured by NSS Industries, or approved equal.

Hexagonal bolts, nuts and washers for flanged fittings shall be zinc plated, high strength, low-carbon steel conforming to the chemical and mechanical requirements of ASTM A307, Standard Specifications for Carbon Steel Bolts and Studs, 60,000 psi Tensile Strength, Grade A.

Stainless steel nuts and bolts are required for above ground installations, steel pipe installations and stainless steel tapping sleeves. For all stainless steel nuts and bolts, the Contractor shall strictly follow the torque limitations and shall use N-500 Loctite® anti-seize/rust preventer lubricant manufactured by Henkel Company or approved equal.

All buried nuts and bolts shall be coated after assembly as per Section 4-00.01.

4-08 MAIN LINE VALVES

For water mains, resilient seated gate valves shall be used for 4 to 12 inches and butterfly valves for 14 inches and larger lines, unless shown differently on the plans or directed by the Engineer. All ferrous components of valves shall be ductile iron and coated with fusion bonded epoxy.

All valves shall open by turning the wrench nut left (counter-clockwise).

Prior to factory valve assembly, all internal and external ferrous metal surfaces shall be coated with a fusion bonded epoxy with a minimum dry film thickness of 10 mils. Coating shall conform to AWWA Standard C550, “Protective Epoxy Interior Coating for Valves.”

4-08.01 General

Valves should be ductile iron body, fusion bonded epoxy lines, non-rising stem butterfly or fully encapsulated resilient wedge disk type gate valve and shall not have more than two internal moving parts. All valves shall open by turning the wrench nut counter-clockwise. Operating nut for butterfly valves shall be placed at the north or east side of the water line.

When required, above ground installations shall be resilient seat/wedge disk type valves with outside screw and yoke.

All bronze parts shall contain no more than 7% zinc, nor more than 2% aluminum. Stems shall be low zinc bronze, and equipped with a 2 inch operating nut conforming to AWWA C515. The valve manufacturer shall employ a positive physical means of indicating the specified stem material to insure ready recognition during inspection. The bolts and nuts on the bonnet shall be stainless steel type 304 or 316 with an anti-seize lubricant.

The ductile iron interior and exterior of all valves shall be protected with 10 mils (nominal) fusion bonded epoxy. Coating shall conform to AWWA Standard C213 and C550 and shall be certified to NSF 61. Field repair of epoxy lining is not permitted.

For above ground or vault installation, exterior coating to valves shall be as per Section 5-10.

Resilient wedge type gate valves with a flanged end may be used as “tapping valves.”

All valves shall be provided with an epoxy coat stem extension if depth of valve nut exceeds five feet. All valve extensions shall be centered in the valve well by use of a guide and shall be operated freely without binding after installation.

4-08.02 Gate Valves

Gate valves twelve inch and below shall conform to the requirements of AWWA Standard C509 Resilient-Seated Gate Valves and shall be “full wall ductile iron.”

All gate valves shall be ductile-iron body equipped with double O-ring stem seals, EPDM O-rings, and stainless steel bolts.

Approved Gate Valve Manufactures	
Clow	C515
US Pipe	Model # A-USP2
Mueller	A-2362

4-08.03 Butterfly Valves

Butterfly valves shall conform to the requirements of AWWA Standard C504. Valves shall have a minimum working differential pressure across the valve disc of 150 psi for class 150B valves and 250 psi for class 250B valves. Valves shall be flanged short-body or restrained mechanical joint as indicated per the Construction Drawings. Flanges for both Valve Class 150B and 250B shall be drilled per ANSI B16.1, 125-pound standard bolt pattern. Valves shall be designed for buried installation.

Component	Material	Specifications
Body	Ductile Iron	ASTM A-536, Grade 65-45-12
Valve Shaft	Stainless Steel	Type 304 and Type 316
Exposed body, cap, screws, bolts and nuts including squeeze-pins		
	Stainless Steel	ASTM A-276, Type 316
Disc	Ductile Iron	ASTM A-536, Grade 65-45-12
Valve Seat	EPDM Rubber	ASTM D-412
O-Rings	Synthetic Rubber	ASTM D-2000

Valve seat material shall be peroxide cured EPDM rubber seat and shall be fastened integrally with the valve body. The valve disc shall be furnished with a stainless steel seating edge to mate with the rubber seat in the valve body. Valves with the seat located on the disc shall not be accepted.

The ductile iron interior and exterior shall be factory coated with NSF 61 approved 16 mils DFT high solids 2 part epoxy of no less than 65% conforming to AWWA standard C550, as manufactured by Amerlock® 400, Tnemic 141, or approved equal.

Valve operators shall be the manual type. Valve actuator shall be supplied and installed on the valve by the valve manufacturer. Gear actuators shall be for buried service applications and shall come furnished with a standard 2" AWWA operating nut. The operators shall be of travelling nut type with adjustable stops for valves smaller than 24 inches in size. The operator for valves 24 inches and larger shall be worm gear type.

Approved Butterfly Valve Manufactures	
Mueller	B-3211, Lineseal XP2
Pratt	Groundhog, HP 250
DeZurik	BAW
Clow	4500 Series

4-08.04 End Connections and Gasket Materials

Gaskets shall conform to the requirements of Section 4-07.03 of these Specifications.

Valves shall have mechanical joints or flanged ends, or a combination of both. Unless otherwise shown on plans, all buried gate valves installed at

fittings shall be flanged by mechanical joints, with the flange abutting the fitting.

4-08.05 Combination Air Release Valves

Unless otherwise specified, combination air release valves shall be of a single housing that combines the operating features of both an air/vacuum and an air release valve. They shall permit automatic escape of large quantities of air from pipelines when it is being filled, permit large quantities of air to enter pipeline when it is being emptied, and allow accumulating air to escape while pipeline is in operation under pressure. Combination air release valves shall be manufactured to meet or exceed the requirements of AWWA Standard C512, "Air-release, Air/Vacuum, and Combination Air valves for Waterworks Service."

Prior to factory valve assembly, all internal and external ferrous metal surfaces shall be coated with a fusion bonded epoxy with a minimum dry film thickness of 10 mils. Coating shall conform to AWWA C550 and shall be ANSI/NSF Standard 61 certified. Field repair of epoxy lining is not permitted.

There shall be a downward facing screen vent on the valve outlet that meets OSHA requirements.

Approved Air Release Valve Assembly Manufacturers

	1"	2"
ARI	D040	D040
Pratt	WVC10-564-300	WVC20-332-300

4-08.06 Valve Can Assembly

Valve can assembly materials and approved manufactures/models are shown on City of Norco Standard Drawing 470.

4-09 FIRE HYDRANT ASSEMBLY

Fire hydrant assemblies shall be of the wet-barrel epoxy coated, ductile iron body type conforming to AWWA C503, "Wet-Barrel Fire Hydrants." The Standard for assembly consists of a one-piece body section connected to a break-off check valve and a one-piece bury section with a nominal ID six-inch bolted flange joint. The flange shall have a bolt pattern of eight (8) equally spaced bolt holes of ¾ inch diameter. See City of Norco Standard Drawing 430 for break-off check valve requirements.

4-09.01 Materials

The hydrant body shall be ductile iron conforming to AWWA C110. All ferrous surfaces inside the body shall be fusion-bonded epoxy coated conforming to the requirements of AWWA C550. The body of the hydrant shall be painted as specified in Section 5-10 of these Specifications.

The plan shall designate either a type 1 or type 2 hydrant. A type 1 hydrant shall have one 2½" hose outlet and one 4" pumper outlet. A type 2 hydrant

shall have two 2½" hose outlets and one 4" pumper outlet. The outlet threads shall conform to ANSI – B26 "National Standard Fire-Hose Coupling Screw Threads." Hydrants shall be equipped with cast or ductile iron outlet nozzle caps fitted with appropriate neoprene rubber gaskets.

The valve-operating stem and outlet-nozzle cap nuts shall be pentagonal, with 1⅛" from point to flat, and the length of the pentagon shall be no less than one inch. The hydrant cap is removed and the valve opened by turning left (counter-clockwise). The valve outlet-nozzle cap shall be cast iron or ductile iron.

Approved Fire Hydrant Manufacturers

	Type 1	Type 2
Clow	850D	860D
Jones	4040D	4060D

Approved Break off Check Valve Manufacturers

Clow	400A

4-09.02 Hydrant Bury and Extensions (Spools)

Fire hydrant buries shall be cast or ductile iron, asphalt coated and cement lined. The base of the bury shall have a mechanical joint conforming to AWWA C110.

When shown on the plans or approved by the Engineer an extension (spool) may be inserted between the hydrant body and bury. The spool shall be a non-break away and shall be cast or ductile iron, asphalt coated and cement lined.

4-09.03 Hydrant Protection

Due to location, terrain, available drainage area, and/or system pressure, the plans or the Engineer may require guard posts for hydrant protection. See Standard Drawing 431 for guard post requirements.

Guard Post Sleeves

Uline.com	H-3008 (6")

4-09.04 Hydrant Reflective Markers

Markers shall be blue, dual-face and reflective, conforming with the State of California Department of Transportation S.T.O. Specification, Section 85-1.05. Markers shall be Stimsonite 88AB or approved equal.

Epoxy to permanently mount the marker shall be two parts, standard set, as sold by Western Highway Products, 10650 Fern Avenue, Stanton, California 90680, or approved equal.

4-10 SERVICE LATERAL INSTALLATION

All valves and fittings for use in one inch and two inches service laterals from the main to the meter shall conform to the requirements of AWWA Standard C800, "Underground Service Line Valves and Fittings," and meet the California Health and Safety Code Section 116875. Materials in contact with potable water shall be lead free per SB1334. All corporation stops and angle meter valves used for copper installations shall have compression connection for copper tubing. Approved manufactures are Jones, Ford, McDonald, and Mueller, as shown on City of Norco Standard Drawings 410 and 412.

4-10.01 Corporation Stops

All corporation stops shall have inlet iron pipe (IP) threads as specified by AWWA C800 with outlet being a compression connection for copper tubing.

4-10.02 Angle Meter Valves

All angle meter valves shall be full port "ball" type, have a locking wing on the key operator, and with full 360 degrees rotation of tee head (less stop). All valves for ⅝ x ¾ inch and 1 inch meters shall have a compression inlet and a meter swivel nut outlet. All 2 inch valves shall have a compression connection inlet for two 2 inch copper tubing and a meter flange outlet slotted to accommodate 1½ inch and 2 inch meters. Slots should not extend to the outside edge of flange – open slots are not accepted.

4-10.03 Copper Tubing

Copper tubing for service laterals shall be one inch or two inches seamless, annealed, Type "K" meeting the requirements of ASTM B-88, "Specifications for Seamless Copper Water Tube."

Copper tubing shall be furnished in coils or straight lengths as follows:

Size	Form	Length
1" & 2"	Coils	60' to 100'
2"	Straight Lengths (rigid)	20'

Coils shall be wound in a single layer flat with a minimum 24 inch inside diameter.

4-10.04 Red Brass Pipe

Brass pipe shall conform to the requirements of the "Specifications for Seamless Red Brass Pipe, Standard Sizes" ASTM Specification B-43, and referenced in the appendix to AWWA Standard C800.

4-10.05 Service Saddles

For 1 inch and 2 inch service taps, service saddles are required for all types of pipe. Service saddle outlets shall be tapped as specified by AWWA C800. Outlet threads for 1 inch and 2 inch service saddles shall be iron pipe threads

(IP). All service saddles for cast or ductile iron pipe shall be bronze conforming to ASTM B-62 with double strap. All service saddles for PVC pipe, AWWA Standard C900, shall be bronze conforming to ASTM B-62, incorporating stainless steel bands in place of the standard bronze straps. Approved manufactures and catalog numbers are shown on City of Norco Standard Drawings 410 and 412.

Service tapping to concrete cylinder pipes shall only be made under special approval by the Public Works Department.

4-10.06 Meter Boxes and Vaults

Meter boxes and vaults shall be constructed of straight wall polymer concrete. Where required, meter boxes shall have traffic loaded rating covers. All Covers that are exposed to foot traffic have a slip resistant surface that meet the American with Disabilities Act slip resistance requirements. Contractor is responsible for selecting a meter box or vault that is sized appropriately to accommodate all required water materials specified in Standard Drawings. The meter lid must include a properly sized cut-out to fit a Sensus Model 520M radio transceiver. Contractor is required to submit said meter box or vault to the City for review and approval prior to installation.

Approved Manufacturer
Armorcast Products Company

4-11 LARGE SERVICE INSTALLATION

4-11.01 Meter Assembly

All large service installations, except fire lines, shall include a meter, backflow device, and provisions for a temporary bypass line and test tee. For three-inch and larger service laterals, meter size, type and manufacturer, bypass, test tee, and backflow device are shown on City of Norco Standard Drawings 415.

Meter Manifolds - For projects that require the installation of multiple meters the City may elect to require a manifold of meters to be installed off of one service lateral that can meet all flow demands. All manifolds shall be designed and approved by the Engineer.

4-11.02 Tapping Tees

See Section 4-06.01 of these Specifications for tapping requirements.

4-11.03 Backflow Prevention Assemblies and Fire Lines

See Section 3 of these Specifications for backflow prevention assembly and fire line requirements.

4-11.04 Guard Posts

Where required by the plans or by the Engineer if field conditions so dictate, guard posts shall be installed. The number, size and specific location of such posts will be determined by the Engineer if not shown on the plans. Guard posts shall be per City of Norco Standard Drawing 431.

4-12 METERS

The Public Works Department will provide the required water meter for each new service. All fees for new services and meters must be paid prior to the new meter being provided.

4-12.01 Positive Displacement Types

The use of positive discplacement meters requires prior approval by the Public Works Department and will be authorized only on a case by case basis. All meters shall consist of a bronze main case with serial numbers stamped on the main case. All meters shall be read in cubic feet.

4-12.02 Turbine Types

The use of turbine meters requires prior approval by the Public Works Department and will be authorized only on a case by case basis. When authorized, all turbine meter installations shall include a strainer and shall conform to AWWA C701. All meters shall consist of a bronze main case with serial numbers stamped on the main case. All meters shall be read in cubic feet.

4-12.03 Compound Types

The use of compound meters requires prior approval by the Public Works Department and will be authorized only on a case by case basis. When authorized, all compound meter installations shall include a strainer and shall conform to AWWA C702. All meters shall consist of a bronze main case with serial numbers stamped on the main case. All meters shall be read in cubic feet.

4-12.04 Multi-Jet Types

The use of multi-jet meters requires prior approval by the Public Works Department and will be authorized only on a case by case basis. When authorized, all multi-jet meter installations shall conform to AWWA C708. All meters shall consist of a bronze main case with serial numbers stamped on the main case. All meters shall be read in cubic feet.

4-13 DEVIATION FROM SPECIFICATIONS

Any deviation from these specifications shall be submitted in writing by the Contractor to the Engineer. Said submittals shall be delivered to the Engineer to allow sufficient time

for review. The Engineer's determination will be provided in writing and must be available to the Contractor two (2) working days prior to construction schedule.

4-14 MATERIAL CERTIFICATIONS

All water system materials furnished for installation by Contractor shall be provided with clear manufacturer's markings and labeling indicating that the material furnished meets the standards and requirements of these Specifications. All materials shall be new, not previously used, and of current manufacture. In addition, the engineer may request that a written manufacturer's statement be provided indicating that a material conforms to the standards and requirements of these Specifications.

All materials shall be subject to inspection. No materials shall be installed until accepted by the Engineer.

A copy of invoices of all materials furnished by the Contractor shall be furnished to the Engineer as proof of compliance with these specifications upon request.

All like materials shall be of one manufacture for any particular project.

SECTION 5 – INSTALLATION OF DUCTILE IRON AND PVC PIPE, VALVES, FITTINGS, FIRE HYDRANTS, AND APPURTENANCES

5-01 GENERAL

Unless specified differently on the plans or as supplemented herein, installation of ductile iron pipe, valves, fittings, fire hydrants, and appurtenances shall conform to the applicable requirements of AWWA C600, “Installation of Ductile-Iron Water Mains and Their Appurtenances,” and the applicable provisions of the Ductile Iron Pipe Research Association (DIPRA) “Guide for the Installation of Ductile Iron Pipe.” Installation of Polyvinyl Chloride (PVC) Pressure pipe shall conform to the requirements of AWWA Standard C605, “Underground Installation of Polyvinyl Chloride (PVC) Pressure Pipe and Fittings for Water.”

The Contractor shall furnish all labor, equipment and materials required to construct, install, and complete the ductile iron pipelines, connections, valves, fittings, fire hydrants, thrust restraints, and all other appurtenances as shown on the plans and specified herein.

The interior of all pipes, valves, fittings, and fire hydrants shall be kept free from dirt and foreign materials at all times during the progress of the work and left clean at the completion of installation.

5-02 CONSTRUCTION MATERIALS

The Contractor shall furnish only approved materials per Section 4, “Materials” and Section 8, “Referenced City of Norco Standard Drawings,” of these Specifications. All materials shall be new and of the best quality for their intended use. All like materials shall be of one manufacturer for any particular project.

5-03 INSTALLING WATER MAIN PIPE

The pipe and fittings shall be inspected for defects prior to lowering in trench. All lumps, blisters, excess coating, and other foreign materials shall be removed from the bell and spigot ends of each pipe. The outside of the spigot and the inside of the bell shall be wiped clean and dry and shall be free from oil and grease before the pipe is laid.

Pipe shall be lowered into the trench with fabric or other approved slings. Under no circumstances shall pipe be dropped, pushed off the bank, or allowed to fall into the trench. Every precaution shall be taken to prevent foreign materials from entering the pipe while it is being placed in the trench. If the pipe-laying crew cannot put the pipe into the trench and in place without getting soil into it, the Public Works Department may require that before lowering the pipe into the trench, a temporary plug be placed over each end and left there until the connection is to be made to the adjacent pipe. During laying operations, no debris, tools, clothing or other materials shall be left in the pipe.

At times when pipe laying is not in progress, the open ends of pipe shall be closed by watertight plug or other means approved by the Public Works Department. This

provision shall apply during lunch-hour breaks as well as overnight. If water is in the trench, the seal shall remain in place until the trench is pumped completely dry.

5-03.01 Laying Ductile Iron Pipe, Bends, and Fittings

Installation of pipes, bends and fittings shall be in accordance with AWWA Standard C600, “Installation of Ductile-Iron Water Mains and Their Appurtenances”. Whenever it is necessary to deflect pipe from a straight line either in the vertical or horizontal plane to avoid obstructions or where long radius curves are required, the amount of deflection allowed shall not exceed that required by DIPRA for a satisfactory joint and shall be approved by the Engineer. Short lengths of pipe may only be used at locations where fittings are to be installed or in situations where adequate total horizontal and/or vertical joint deflection may not be obtained by using a standard length of pipe.

Except where necessary in making connections with other water pipelines, or where otherwise authorized by the Engineer, pipe shall be laid with the bells facing in the direction of installation. For lines on appreciable slopes, bells shall face upgrade unless directed otherwise by the Engineer.

During laying operations, no debris, tools or other foreign materials shall be placed in the pipe. When pipe lay operation is not in progress, the open ends of pipe shall be kept tightly closed by watertight expandable plugs or other means approved by the Engineer.

No pipe or appurtenances shall be laid in water or when, in the opinion of the Engineer, trench or weather conditions are unsuitable for such work.

After pipe has been set in trench, exterior of spigot and interior of bell shall be thoroughly cleaned. A water-soluble, NSF 61 approved and nontoxic lubricant as approved by pipe manufacturer shall be applied to rubber gasket. Pipe ends shall be aligned, and spigot shall be pulled into bell with come-along devices, or hoists with chains and slings, unless permitted otherwise by the Engineer. If a pry bar is used, a timber header shall be placed between the pipe and the pry bar before the spigot is pushed into bell. A feeler gage shall be used to determine if each joint has been properly assembled.

5-03.02 Laying PVC (C900 & C905) Pipe

Installation of pipe shall be in accordance with AWWA C605 “Underground Installation of Polyvinyl Chloride (PVC) Pressure Pipe and Fittings for Water” and the pipe manufacturer’s installation manual. PVC bends and fittings are not allowed with the exception of high deflection couplings. The Uni-Bell Handbook of PVC Pipe-Design and Construction shall be used for details of pipe installation practice except as follows and were noted otherwise on plans. Longitudinal bending of pipe sections is prohibited. Any directional changes shall be accomplished through manufacturer approved 1 degree deflection of push-on joints, 1-5 degree deflection of high deflection couplings, or ductile iron bends and fittings.

Copper tracer wire shall be installed and secured to the top of all PVC pipes as it is being laid. The tracing wire shall be stubbed up at each valve (brought into valve box), to each service (grounded to the corporation stop), to all appurtenances and to all hydrants (coiled around the barrel just below the top flange with 16 inches excess). Tracer wire shall be secured to the top of the pipe, at minimum of 10 foot intervals, with plastic adhesive tape. The copper wire shall be #10CCS High Strength 600# Break Load with Locking SnakeBite Tracer Wire Connectors, or approved equal.

The wire shall be electrically continuous throughout the entire piping system. All splices of the wire shall be made securely and covered thoroughly with a Direct Bury Splice Kit, 3M DBY/DBR or approved equal. The Contractor shall schedule a conductivity test (conducted by the City) on completion of the water main installation and prior to the final pavement. If the conductivity test fails, the Contractor shall be responsible for making the necessary repairs, until passing results are achieved. Additional compensation will not be allowed therefore.

Warning/identification tape shall be 6-inch wide, blue in color and marked “Caution Water Line Below”. Tape shall be installed directly above “Intermediate Zone”. Refer to City of Norco Standard Drawings 401 for zone identification.

Point load set screws in retainer glands and flanges are prohibited; whereas those devices with pads or full circle may be acceptable and subjected to approval by the Engineer.

5-03.03 Cutting Pipe

The cutting of ductile-iron and C900 & C905 PVC pipe for installing tees, fittings, or for other reasons shall be done in a neat manner without damage to the pipe or cement lining so as to leave a smooth end at right angles to the axis of the pipe. Unless otherwise authorized by the Engineer, all such cutting of ductile iron and PVC pipe shall be done with a special cutting tool specifically made for cutting and machining pipe. Cut ends and rough edges shall be ground smooth and for push-on joints beveled at angles recommended by manufacturer.

5-03.04 Polyethylene Protective Wrapping

Unless otherwise shown on the plans, polyethylene protective wrapping (Polywrap) for ductile iron pipe shall be furnished and installed on all buried water lines, except where water lines are within steel casing pipe, in accordance with the requirements of AWWA Standard C105, “Polyethylene Encasement for Ductile Iron Pipe Systems,” Section 4 of these Specifications, and as supplemented herein. Polywrap shall be installed so as to prevent any sections of the pipe, fittings, valves, services, or appurtenances from contacting the soil. The polywrap shall be taped to provide a snug fit along the pipe.

Any punctures, tears or other damages shall be patched with polyethylene wrap and tape. Openings for service taps, blow offs or similar appurtenances shall be cut in the polywrap during backfilling of the trench. Rock or other materials that could damage the wrapping shall not be allowed in the backfill.

5-03.05 Protection of Metal Surfaces

All exposed metal surfaces of the valves, flanges, bolts, nuts, tie-rods, turn buckles, etc., in contact with the earth and backfill materials shall be coated with a minimum of 30 mils of bitumastic coating prior to backfilling. In addition to this coating, the main and fittings shall be encased in polyethylene wrapping as described in Section 5-03.04.

5-03.06 Thrust Restraints

Unless shown differently on the plans or as directed by the Engineer, thrust restraints shall be required at all bends, tees, pipe ends, and fire hydrant bury. Thrust restraints through other mechanical means as specified in Section 4-04 of these Specifications shall also be incorporated.

5-03.07 Flushing

After the pipeline has been completely installed, flushing of the pipeline shall be done per the requirements of Section 6 of these Specifications.

5-04 VALVE BOX ASSEMBLY

Unless specified differently on the plans or as supplemented herein, installation of a valve box assembly shall conform to the requirements of City of Norco Standard Drawings 470. All buried gate and butterfly valves shall be boxed with the valve cover flush with the finish street pavement grade. The valve box riser shall rest on the bonnet of the gate valve and shall be cut to the required length to assure a level and/or flush fit to finish grade. The valve box shall be installed so as not to transmit shock loads or stress to the valve. All valve boxing shall be installed straight and plumb and centered over the valve operating nut. All active valves shall be accessible at all times during construction operations.

A valve stem extension is required when the depth from finished grade to the operating nut is greater than 60 inches. The valve stem extension shall be per City of Norco Standard Drawing 471.

Excavation and backfill for a valve box assembly shall be per Section 2 of these Specifications.

5-05 FIRE HYDRANT ASSEMBLY

Unless otherwise directed by the Engineer, the installation of a fire hydrant assembly shall conform to City of Norco Standard Drawing 430. Hydrants shall be set plumb and at such elevation that the lateral and main shall have approximately the same depth of cover.

Fire hydrants shall be placed where shown on the plans, unless otherwise directed by the Engineer. Locations shall provide complete accessibility and adequate pedestrian clearance in accordance with the Americans with Disabilities Act (ADA) requirements and minimize the possibility of damage from vehicles.

Where required by the plans or as directed by the Engineer, fire hydrant guard posts shall be installed per City of Norco Standard Drawing 431.

All hydrants not in service shall be bagged or otherwise identified as directed by the Engineer.

Contractor shall field paint the fire hydrant barrel and guard posts in accordance with the applicable field painting requirements addressed later in this Section.

5-06 LARGE SERVICE LATERALS, BACKFLOW ASSEMBLIES, AND FIRE LINES

Unless specified differently on the plans or as supplemented herein, installation of large service laterals (3-inch and larger) shall conform to City of Norco Standard Drawings 415 and 416.

The Owner/Developer or Contractor shall be responsible for preparation of the necessary design plan showing the proposed large service installation together with meter and appurtenances, backflow assemblies and fire lines. The plan shall be submitted to the Engineer for review and must be approved prior to the beginning of construction. All licenses and permits, and other requirements shall be in accordance with the requirements of Section 1 of these Specifications.

The horizontal runs of all above ground large services, backflow assemblies, and fire lines shall be installed in a level position.

No sewers and water laterals shall be laid in the same trench.

Contractor shall field paint all aboveground, bare, or exposed piping and appurtenances of large services, backflow assemblies, and fire lines in accordance with the applicable field painting requirements addressed later in this Section.

5-06.01 Meters

All large service installations shall include a meter and provisions for a temporary bypass line. Meters shall conform to size, type and manufacturer as shown on the plan or per City of Norco Standard Drawing 415. The Engineer reserves the right to specify the type of meter if, in the Engineer's sole opinion, a specific type of meter is best suited for the proposed application. Meters shall read in cubic feet.

Meter Manifolds - For projects that require the installation of multiple meters the City may elect to require a manifold of meters to be installed off of one service lateral that can meet all flow demands. All manifolds shall be designed and approved by the Engineer.

5-06.02 Backflow Assemblies

Unless specified differently on the plans, all larger service installations shall include backflow assemblies per Section 3 of these Specifications.

5-06.03 Fire Lines

Unless specified differently on the plans or as supplemented herein, installation of fire lines shall conform to City of Norco Standard Drawings 416 and 451.

5-07 SMALL SERVICE LATERALS

All materials for one inch and two inch diameter service laterals shall be supplied and installed by the Contractor per Section 4 and City of Norco Standard Drawings 410 and 412, respectively. The service lateral shall consist of a double strap service saddle, corporation stop, copper tubing, angle meter stop, meter, customer valve, meter box assembly and materials necessary to reconnect existing (customer) house pipe. Reconnection of house pipe shall be with like material. Reconnected copper pipe shall have soldered connections. Reconnected galvanized pipe shall include dielectric union at the brass nipple connection, downstream of meter box.

Meter Manifolds - For projects that require the installation of multiple meters the City may elect to require a manifold of meters to be installed off of one service lateral that can meet all flow demands. All manifolds shall be designed and approved by the Engineer.

Service laterals shall be installed perpendicular to the centerline of the street with a four inch “W” letter chiseled into the curb face opposite the location of the corporation stop.

Meter boxes shall be brought to grade upon construction of concrete sidewalks and grading of parkway. Meter boxes for 1 inch service laterals located in areas subject to traffic loading, or located behind rolled curbs shall be installed with traffic bearing covers. Regardless of location, all meter boxes for 1½ inch and 2 inch meters shall be installed with traffic bearing covers.

No sewers and water laterals shall be laid in the same trench.

All new services shall be installed before new mains are pressure tested and chlorinated.

5-07.01 Backfill Compaction

Backfill and compaction requirements in the area adjacent to the copper tubing service later shall conform to Section 2 of these Specifications. Compaction of backfill materials by mechanical means directly over the exposed service tubing shall not be allowed unless approved by the Engineer.

5-07.02 Backflow Assemblies

Unless specified differently on the plans or as supplemented herein, installation of backflow assemblies for small installations shall conform to City of Norco Standard Drawing 412, 415, 450, 451 and Section 3 of these Specifications.

5-08 CONNECTION TO THE EXISTING DISTRIBUTION SYSTEM

The Contractor shall make the connection to the existing distribution system as shown on plans or as directed by the Engineer. All connections must be made in the presence of the Engineer. Proper hydrostatic testing, disinfecting and flushing of new facilities must take place per Section 6 of these Specifications prior to permanent connections.

5-08.01 Pressure Tapping

The Contractor may tap cast iron and ductile iron distribution mains under pressure as approved by the Engineer (no-size on size tapping). The exterior surface of the pipe shall be cleaned to provide a smooth surface for the tapping sleeve. The tapping sleeve shall be secured to the pipe to prevent movement during the tapping process. The Engineer may require the Contractor to install a flanged tee to accommodate the new service lateral.

Pressure tapping of concrete cylinder pipe requires prior written approval by the Engineer.

5-08.02 Shutdown of Main

All work necessary to shut down an existing distribution main for the benefit of the Contractor shall be operated by the Public Works Department. Under no circumstances shall the Contractor operate valves, hydrants, and other appurtenant equipment on the existing distribution system.

It shall be the Contractor's responsibility to coordinate the necessary shutdown schedules through the Engineer assigned to the project. Scheduled shutdowns shall require sufficient time to allow operation personnel to review, approve, and develop an appropriate program.

The City will make a concerted effort to isolate the system as planned with the Contractor. If a water-tight shut down cannot be achieved, the Contractor shall be prepared to employ necessary pumping equipment to remove the water from the trench. City shall not be responsible for any delays due to system shutdown and isolation.

All emergency situations shall be reported immediately to the City at (951) 270-5602 (7 am to 6 pm) and after-hours at (951) 371-1143 (6 pm to 7 am). When an extensive and/or lengthy main shutdown is required, the Engineer will determine what temporary service connections may be required. The Contractor shall furnish all necessary hoses, piping, valves, tank trucks and associated labor required to provide such temporary service at no cost to the City. All piping, hoses, and associated equipment used in temporary service

connections shall be flushed and disinfected in accordance with Section 6 of these Specifications.

In making connections to existing mains, the Contractor shall perform the work in the shortest time possible and shall do the work in such a manner and as such time that will cause the least inconvenience to water users because of shutoff water services. No valves or other controls on the existing distribution system shall be operated for any purpose by the Contractor without the approval of the Engineer. All consumers affected by such operation shall be given a notice letter at least two working days before the operation advising of water service outage and the probable time when service will be restored. All such service interruption notices shall be prepared and distributed by the City to ensure proper notification is completed.

All tie-in locations shall be excavated a minimum of one working day in advance of final connection to expose the affected portions of existing pipelines and to allow time for the necessary measurements, assembly of materials and equipment, and assuring that all pre-assembled piping and fittings will be compatible with the existing main.

The Engineer may postpone or reschedule any shutdown operations if for any reasons he feels that the Contractor is improperly prepared with competent personnel, equipment, or materials to proceed with connection work. If it appears the connection to the existing distribution main cannot be made in the time specified, the City shall order necessary corrective measures at the Contractors expense.

5-08.03 Transfer of Jurisdiction of Completed Work

The Contractor shall be aware that once a physical connection is made to the City's system, the valves and appurtenances are under the City's jurisdiction and shall only be operated by authorized City personnel on a prearranged program schedule. The transfer of jurisdiction does not relieve the Contractor of any responsibilities for the quality of work or materials.

5-09 ABANDONMENT OF EXISTING WATER MAINS, VALVES, AND APPURTENANCES

Existing water mains, valves and appurtenances shall be abandoned at the locations as shown on the plans. Contractor shall abandon the existing water main facilities after transferring of jurisdiction of the new main to the City. Contractor shall use 1-sack slurry to fill all abandoned waterlines.

5-10 FIELD PAINTING

The Contractor shall field paint all above ground, bare, or exposed piping and appurtenances in accordance with the applicable specifications and plans. Unless specified differently on the plans or as supplemented herein, painting of water system installations as identified below shall conform to the applicable requirements of Section 310 of the Standard Specifications and in accordance with manufacturer's recommendations. Contractor shall not spray paint during windy conditions.

5-10.01 Surface Preparation

Remove all dirt, grease and oil from surfaces to be painted by washing the surface with cleaner/degreaser, commercial detergent or other approved cleaning methods. Loose rust, scale and deteriorated coatings shall be removed by sandblasting, scraping and wire brushing, or power tool cleaning. Galvanized and non-ferrous surfaces shall be solvent cleaned.

Care should be taken to protect outside screw and yoke (OS&Y) gate valve stems, meter registry, glass, brass test cocks, I.D. tags and other surfaces identified by the Engineer during surface preparation. These items should be masked off and not receive any primer finished coat.

5-10.02 Primer Finished Coat

All installation surfaces shall be primed with Gray Primer aerosol spray coating (2 mils). The first finished coat may be applied after primer has dried.

The following installations shall have two finished coats (2 mils each) aerosol spray coating. The second finish coat shall be applied within 1 hour or after 48 hours. Listed below are installations and associated colors and manufacturer's paint catalog numbers:

Dark Green	Black	Safety Red
Fireline Assemblies	Steel Plate Meter Box Covers	Private Fire Hydrants
Large Meter Assemblies	Valve Stem Extensions	Fire Dept. Connections
Backflow Assemblies		

The following installations shall have two finished coats (2 mils each) aerosol spray coating. The second finished coat shall be applied after 24 hours. Listed below are installations and associated colors and manufacturer's paint catalog numbers:

Safety Yellow
Public Fire Hydrants
Air Release Assembly Covers (metal)
Guard Posts

SECTION 6 – PIPELINE FLUSHING, HYDROSTATIC TESTING, AND DISINFECTING

6-01 GENERAL REQUIREMENTS

Hydrostatic testing and disinfecting (chlorination and flushing) of newly laid pipelines and appurtenances must be completed before the pipelines can be connected to the existing water distribution system. **Pipelines and appurtenances shall remain isolated from the existing water distribution system, during hydrostatic testing and disinfecting.**

Unless specified otherwise or approved by the Engineer, Contractor shall test against test plates for pipelines 12 inches and smaller. Contractor shall not remove said test plates until pipelines have been pressure tested, disinfected and accepted by the Engineer.

All services, hydrants, air release valves, and other appurtenances connected to the newly laid pipelines shall be pressure tested and disinfected at the same time as that of the pipelines. Care shall be taken to expel all air from the pipelines and services during any filling operations.

Independent newly installed large services (4 inches and larger), fire lines, fire hydrants and other appurtenances that are being connected to existing pipelines shall be subjected to the same hydrostatic testing and disinfecting requirements as described herein.

The Contractor shall disinfect the pipelines prior to hydrostatic testing for pipelines larger than 12 inches in diameter or as directed by the Engineer.

For pipelines with a diameter of 12 inches or less, Contractor may disinfect pipelines and appurtenances either before, concurrently with, or after they have been subjected to hydrostatic and leakage tests if approved by the Engineer. If Contractor elects to disinfect before or concurrently with the hydrostatic and leakage tests, Contractor shall again disinfect all or portions of the previously tested pipelines if bacteriological tests come back positive.

6-02 TEMPORARY PIPING AND APPURTENANCES FOR FLUSHING, TESTING, AND DISINFECTING

The Contractor and/or subcontractor shall supply all temporary piping, corporation and curb stops, test plates, bulkheads, plugs, pipe end caps, valves, fittings, calibrated meters, equipment, labor, and method necessary for pressure testing, chlorinating, and flushing of the newly laid pipeline. The Contractor shall also provide any temporary piping, backflow devices, and appurtenances needed to carry potable water to the section of pipeline being flushed, pressure tested, or disinfected.

Corporation curb stop taps used for flushing, pressure testing, and disinfecting shall comply with service tap requirements for ductile iron pipe or C900 PVC pipe. Unless specified otherwise, the tap shall be made at the top of pipe.

6-03 FLUSHING

If the tablet method of chlorination, as described later in this Section is not used, then the new pipeline shall be flushed prior to hydrostatic testing for chlorination or as directed by the Engineer. The pipeline flushing velocity shall not be less than 2½ feet per second. The minimum volume of water to be flushed, at the required velocity, shall not be less than 1½ times the volume of the pipeline from the point of filling to the point of blow-off.

It is the responsibility of the Contractor to dispose of the flushed water or the chlorinated water from the project area. The Contractor shall take all necessary precautions for adequate drainage of water from the site. The disposal of water is described later in this Section.

6-04 HYDROSTATIC PRESSURE TESTING

The Contractor shall hire a licensed independent subcontractor to conduct the required hydrostatic testing of newly laid pipelines. Unless specified differently on the plans or as supplemented herein, hydrostatic testing shall conform to the applicable requirements of AWWA Standard C600, “Installation of Ductile Iron Mains and Their Appurtenances” or AWWA Standard C605, “Underground Installation of Polyvinyl Chloride (PVC) Pressure Pipe and Fittings for Water.” After completion of the hydrostatic testing, the subcontractor shall provide a signed copy of all test results to the Engineer. The Contractor and Engineer shall be present during the testing.

6-04.01 Preparation for Hydrostatic Test

All concrete anchor and thrust blocks associated with sections of the pipeline to be tested shall have cured for a minimum time of 72 hours prior to any flushing or pressurizing of the pipeline. Restrained joints or other methods of pipe support may be used to reduce this time if approved by the Engineer.

If hydrostatic tests precede disinfecting, and the tablet method of disinfecting is not used, the Contractor shall flush the pipeline with potable water to remove dirt and debris. Flushing and disposal of water is discussed elsewhere in this Section.

The amount of pipeline footage to be tested at one time shall be determined by the Engineer and shall not exceed 1,200 feet in length. Test plates (bulkheads), corporation stops, and other temporary facilities required for testing purposes shall be installed at the Contractor’s expense. Testing against valves is not permitted unless approved by the Engineer.

6-04.02 Procedures for Hydrostatic Testing

Each section of pipeline and all fire hydrants, services, and appurtenances connected thereto, shall be subjected to the hydrostatic test.

The pipelines shall be filled with potable water. Care shall be exercised to see that provisions are made for the escape of air at high points and ends of laterals. Contractor shall see that all combination air release valves are open

and operating. After the line has been completely filled, it shall be allowed to stand at 40 psi minimum pressure for a sufficient length of time to permit the escape of any pockets of air and allow the mortar lining to absorb the maximum moisture. During this time, all visible pipes, fittings and joints shall be inspected for leakage.

After the entire section under test has been inspected and no leaks found, the test pressure shall be set at 1.5 times the static pressure at the lowest point along the test section (Engineer to furnish system static pressure data) or 150 psi, whichever is higher. Once the test pressure has been stabilized, the leakage test may begin. Leakage is defined as the quantity of water that must be supplied to continually maintain pressure within 5 psi of the test pressure during a four hour period. The amount of water added shall not be more than the allowable leakage requirements specified per AWWA C600.

6-04.03 Repetition of Hydrostatic Test

If leakage in the section of pipeline tested exceeds the maximum allowable rate specified above, such section will be considered defective. The Contractor shall determine the points of leakage and make the necessary repairs at no cost to City. The subcontractor will then conduct another hydrostatic test. This procedure shall be continued until the leakage falls below the allowed maximum.

6-04.04 After Satisfactory Hydrostatic Test

All valves shall be tested for leak proof tightness after the pipeline hydrostatic test with the test pressure on one side of the valve and atmospheric pressure on the other side.

After test sections have successfully met the hydrostatic test requirements to the satisfaction of the Engineer, the entire pipeline or each test section shall be filled or shall remain filled with potable water until the pipeline is disinfected. Test plates, corporation stops, and other test facilities shall remain in place if needed for disinfecting or removed as directed by the Engineer.

Regardless of the hydrostatic test results, the Contractor shall repair all detectable leaks.

6-05 DISINFECTING

The Contractor shall supply the materials, labor, equipment and methods necessary to disinfect the water main. The Contractor shall hire a state certified laboratory to perform the required bacteriological tests for the newly laid pipelines.

Unless specified differently on the plans or as supplemented herein, disinfecting of water mains and appurtenances shall conform to the applicable requirements of AWWA C651, “Disinfecting Water Mains.”

6-05.01 Preparation For Disinfecting Pipe Lines

Contractor shall tightly shut off every service connection served by the pipeline being disinfected at the curb stop before water is applied to the pipeline. Care should be taken to expel all air from the main and services during the filling operation.

6-05.02 Forms of Chlorine for Disinfection

The forms of chlorine that may be used in the disinfection process are calcium hypochlorite tablets, calcium hypochlorite granules, sodium hypochlorite solution and liquid chlorine

6-05.02.01 Calcium Hypochlorite Tablets

The calcium hypochlorite tablets shall have an average weight of 0.009 pounds each and shall contain no less than 70% of available chlorine.

Adhesive for attaching the tablets to the inside top of the pipeline shall be a type that will not impart taste, odor or detrimental compounds to the water supply.

Calcium hypochlorite tablets shall be stored in tightly closed containers. Proper care shall be taken that they will not be accessible to children or unauthorized persons.

6-05.02.02 Calcium Hypochlorite (Granules)

Calcium Hypochlorite shall be in accordance with the requirements of AWWA Standard B300, “Hypochlorites,” and shall be dissolved in water to known concentration in a container and pumped into the pipeline at a measured rate.

6-05.02.03 Sodium Hypochlorite (Solution)

Sodium Hypochlorite shall be in accordance with the requirements of AWWA Standard B300, and shall be diluted in water to desired concentration and pumped into the pipeline at a measured rate.

6-05.02.04 Liquid Chlorine Solution

Liquid chlorine solution shall be in accordance with the requirements of AWWA Standard B301, “Liquid Chlorine,” and shall be injected with a gas solution feeder chlorinator and a water booster pump.

6-05.03 Methods of Chlorination

The two acceptable methods of chlorination are tablet (calcium hypochlorite tablets) and continuous-feed (direct chlorine solution injection). Chlorination

of pipelines with a diameter of 12 inches or less shall be either direct chlorine solution injection or calcium hypochlorite tablets. Pipelines with a diameter of 14 inches and larger shall be chlorinated by direct chlorine solution injection only.

The end of the main being chlorinated shall be monitored during the application of chlorine and until the desired concentration is reached, after which each fire hydrant or any other connections to the pipeline shall be individually opened and flushed with the chlorine solution. The disposal of flushed water is described later in this section.

6-05.03.01 Calcium Hypochlorite Tablets

The use of calcium hypochlorite tablets is permitted in pipe sizes 4 through 12 inches and only if the pipelines and appurtenances have been maintained in a clean and dry condition during construction. The number of tablets used shall produce a residual of not less than 50 ppm of chlorine in all sections of the pipeline and appurtenances being disinfected when filled with water. During pipeline construction, five-gram calcium hypochlorite tablets shall be placed in each hydrant, hydrant branch, and other appurtenances.

The Contractor shall attach all tablets to the inside top of the pipeline, with approximately equal numbers of tables at each end of a given pipe length. Tablets are attached with an approved adhesive type that will not impart detrimental compounds to the water supply. The smallest practicable amount of adhesive shall be applied to one side of the tablet only. The following table may be used as a guideline of the number of five-gram tablets needed to achieve 50 ppm chlorine residual for each 18 foot length pipe section, based on 3.25-g available chlorine per tablet, and with any portions of tablet rounded to next higher integer.

Pipe Dia. (in.)	Suggested Number of 5-g Tablets
4	2
6	2
8	4
10	6
12	8

Water used to fill a new pipeline during the application of chlorine shall be supplied through a temporary connection that shall include an appropriate cross-connection control device, consistent with the degree of hazard, for backflow protection of the active distribution system. The fill rate when using tablets shall be regulated so as not to exceed one foot per second through the smallest pipeline being disinfected.

6-05.03.02 Continuous Feed

Chlorine shall be applied at a point not more than ten feet from the beginning of the section to be chlorinated and shall be injected through a corporation stop, a hydrant, or other approved connections to ensure treatment of the entire system being disinfected.

Potable water shall be introduced into the pipeline at a constant measured rate. A chlorine solution shall be injected into the potable feed water at a measured rate. The two rates shall be proportioned so that the chlorine concentration in the pipeline produces a residual of not less than 50 ppm of chlorine in all sections of the pipeline and appurtenances being disinfected. Concentration at points downstream shall be periodically checked during the filling to ascertain that sufficient chlorine is being added. Care shall be taken to prevent the strong chlorine solution in the line being treated from flowing back into the line supplying the water.

6-05.04 Retention Period Required and Required Residual

Chlorinated water shall be retained in the pipeline long enough to destroy all non-spore-forming bacteria. This retention period shall be at least 24 hours. After the chlorine-treated water has been retained for the 24 hours, the chlorine residual shall be tested at the pipeline extremities and at other representative points and shall be at least 25 ppm. If the tests show less than 25 ppm residual, the water main and appurtenances shall be rechlorinated and held for another 24 hour period.

During the retention period, all valves and other appurtenances shall be operated to insure internal exposure with the heavily chlorinated water.

6-05.05 Final Flushing

Following the chlorination period of 24 hours and after confirming that a 25 ppm or greater chlorine residual remains, the newly laid pipeline shall be thoroughly flushed to remove the chlorinated water and any foreign materials. A minimum flushing velocity of 2½ feet per second is required for each section of the pipeline. Water shall be flushed from the line at its extremities and at all outlets until the chlorine residual of the section being flushed is equal to or less than the distribution system level.

If so directed by the Engineer, Contractor shall remove portions of certain appurtenances such as combination air valves, blow-offs, and service installations in order to accomplish complete flushing. Contractor shall replace same without adversely affecting disinfected pipelines and appurtenances.

The disposal of the flushed chlorinated water is described later in this Section.

6-05.06 Bacteriological Tests

24 hours after the system has been flushed, the Contractor shall have tests conducted for chlorine residual. Should the chlorine residual in any part of the disinfected system be higher than the distribution system level, the Contractor shall repeat the flushing procedure. If the chlorine residual, after flushing, is equivalent to the distribution system level or less, the Contractor may proceed with the bacteriological tests.

The Contractor shall have a State certified laboratory perform the bacteriological tests. Samples shall be taken at the direction of the Engineer with at least one set of samples collected as every 1200 feet of the new water pipeline, plus one set at each dead-end main section, and at least one set from each branch (i.e., laterals 4 inch and larger). Samples shall be taken 24 or more hours after final flushing of chlorinated water. All samples shall be collected and tested for bacteriological quality in accordance with Standard Methods for the Examination of Water and Wastewater, and shall show the absence of coliform organisms.

The results of the bacteriological tests must be reviewed and approved by the Engineer prior to connecting the newly laid pipeline to the existing water distribution system. Should the test results from the State certified laboratory disclose that the water from the new pipeline does not meet drinking water bacteriological standards, or is not of equal or better quality to that in the distribution system, the process shall be repeated until it meets the required standard.

6-06 DISPOSAL OF TEST WATER

The disposal of all water used in flushing, hydrostatic testing, and disinfecting the sections of pipeline shall be the sole responsibility of the Contractor. The disposal of water shall, in all cases, be carried out in strict observance of the water pollution control requirements of the State Water Resources Control Board.

For contracts administered by the City, the Contractor will be authorized to discharge under the National Pollutant Discharge Elimination System (NPDES) permit issued to the City if all requirements and procedures per such permit are followed. For all other projects, including Developer projects, Contractor or Developer shall obtain an NPDES permit and comply with that permit.

The Contractor shall apply a reducing agent to the solution to neutralize residual chlorine or chloramines remaining in the water. In addition, the flow of water from the section of pipeline shall be controlled to prevent erosion of surrounding soil, damage to vegetation, altering of ecological conditions in the area, and damage to any constructions or maintenance activities occurring in any ditches or storm drains downstream of discharge.

6-07 CONNECTING TO EXISTING DISTRIBUTION SYSTEM

After all hydrostatic tests and disinfections have been completed and demonstrated to comply with the Specifications, the Contractor shall connect newly laid pipeline to the

existing distribution system in accordance with the requirements in Section 5 of these Specifications.

Where connections are to be made to an existing potable water system, swab or spray the interior surfaces of all pipe and fittings used in making the connections with a 5% or greater hypochlorite solution as directed by the Engineer.

As soon as the connection is completed, thorough flushing is required until all discolored water is removed.

6-08 REMOVAL OF TEMPORARY PIPING AND APPURTENANCES

After the newly laid section of pipeline has been approved by the Engineer for connection to the existing distribution system, the Contractor shall disconnect and remove all temporary piping, fittings, test plates, backflow devices, and other appurtenances used for pressure testing, chlorinating and flushing.

Contractor shall remove and replace all stops used for testing and disinfecting of the pipeline with stainless steel repair clamps. Approved stainless steel repair clamp manufacturers are listed in Section 4-05 of these Specifications.

SECTION 7 – SEPARATION OF WATER MAINS AND SANITARY SEWERS

To prevent the contamination of the public water supplies from nearby sanitary sewers, the following State Water Resources Control Board – Division of Drinking Water (DDW) criteria shall be required.

7-01 BASIC SEPARATION STANDARDS

The "California Waterworks Standards" sets forth the minimum separation requirements for water mains and sewer lines. These Standards, contained in Section 64630, Title 22, California Administrative Code, specify:

A. Parallel Construction: The horizontal distances between pressure water mains and sewer lines shall be at least 10 feet.

B. Perpendicular Construction (Crossing): Pressure water mains shall be at least one foot above sanitary sewer lines where these lines must cross.

C. Separation distances specified in A and B shall be measured from the nearest edges of the facilities (i.e., dimensions are from outside of water main to outside of sewer line or manhole).

D. Common trench: Water mains and sewer lines must not be installed in the same trench.

The lack of separation between water mains and sanitary sewers results in an increased potential for contamination of the water supply. Therefore, when adequate physical separation cannot be attained, an increase in the factor of safety should be provided by increasing the structural integrity of both the pipe materials and joints required herein.

7-02 EXCEPTIONS TO BASIC SEPARATION STANDARDS

Local conditions, such as available spaces, limited slope, existing structures, etc., may create a situation where there is **no alternative** but to install water mains or sewer lines at a distance less than that required by the Basic Separation Standards. In such cases, Alternative Construction Criteria as specified in Section 7-04 should be followed, subject to the Special Restrictions in Section 7-03.

Water mains and sewers of 24 inch diameter or greater may create special circumstances because of the large volumes of flow. Therefore, installations of water mains and sewer lines 24 inch diameter or larger should be reviewed and approved by the regulatory agency prior to construction.

7-03 SPECIAL RESTRICTIONS

A. The Basic Separation Standards are available under normal conditions for sewage collection lines and water distribution mains. More stringent requirements may be necessary in conditions such as high groundwater.

B. Sewer lines shall not be installed within 25 feet horizontally of a low head (5 psi or less pressure) water main.

C. New water mains and sewers shall be pressure tested where the conduits are located ten feet apart or less.

D. In the installation of water mains or sewer lines, measures should be taken to prevent or minimize disturbances of the existing line. Disturbances of the supporting base of this line could eventually result in failure of the existing pipeline.

E. Special consideration shall be given to the selection of pipe materials if corrosive conditions are likely to exist. These conditions may be due to soil type and/or the nature of the fluid conveyed in the conduit such as septic sewage that produces corrosive hydrogen sulfide.

Sewer Force Mains

1. Sewer force mains shall not be installed within 10 feet (horizontally) of a water main.

2. When a sewer force main must cross a water line, the crossing should be as close as possible to the perpendicular. The sewer force main should be at least one foot below the water line.

3. When a new sewer force main crosses under an existing water main, all portions of the sewer force main within 10 feet (horizontally) of the water main shall be enclosed in a continuous sleeve.

4. When a new water main crosses over an existing sewer force main, the water main shall be constructed of pipe materials with a minimum rated working pressure of 200 psi or equivalent pressure rating.

7-04 ALTERNATE CONSTRUCTION CRITERIA

The construction criteria for sewer lines or water mains where the Basic Separation Standards cannot be attained are shown in Figures 1 and 2 herein. There are two situations encountered:

Section 7-05 Case 1 – New sewer line – new or existing water main

Section 7-06 Case 2 – New water main – existing sewer line

For Case 1, the Alternative Construction Criteria may apply to the sewer line.

For Case 2, the Alternative Construction Criteria may apply to either or both the water mains and sewer lines.

This construction criterion applies to house laterals that cross **above** a pressure water main but not to house laterals that cross **below** a pressure water main.

7-05 CASE 1: NEW SEWER LINES BEING INSTALLED (Figures 1 and 2)

Zone	Special Construction Required for Sewer
A	Sewer lines parallel to water mains shall not be permitted in this zone without approval from the responsible regulatory agency and water supplier.
B	A sewer line placed parallel to a water line shall be constructed of: 1. Extra strength vitrified clay pipe with compression joints. 2. Class 4000, Type II, asbestos-cement pipe with rubber gasket joints. 3. Plastic sewer pipe with rubber ring joints (ASTM D3034) or equal. 4. Cast or ductile iron pipe with compression joints. 5. Reinforced concrete pressure pipe with compression joints (AWWA C302).
C	A sewer line crossing a water main shall be constructed of: 1. Ductile iron pipe with hot dip bituminous coating and mechanical joints. 2. A continuous section of Class 305 (DR 14, AWWA C900) plastic pipe or equal, centered over the pipe being crossed. 3. A continuous section of reinforced concrete pressure pipe (AWWA C302) centered over the pipe being crossed. 4. Any sewer pipe within a continuous sleeve.
D	A sewer line crossing a water main shall be constructed of: 1. A continuous section of ductile iron pipe with hot dip bituminous coating. 2. A continuous section of Class 305 (DR 14, AWWA C900) plastic pipe or equal, centered on the pipe being crossed. 3. A continuous section of reinforced concrete pressure pipe (AWWA C302) centered on the pipe being crossed. 4. Any sewer pipe within a continuous sleeve. 5. Any sewer pipe separated by a ten-foot by ten-foot, four-inch-thick reinforced concrete slab.

7-06 CASE 2: NEW WATER MAINS BEING INSTALLED (Figures 1 and 2)

Zone	
A	No water mains parallel to sewers shall be constructed without approval from the regulatory agency.
B	If the sewer paralleling the water main does not meet the Case 1, Zone B, requirements, the water main shall be constructed of: 1. Ductile iron pipe with hot dip bituminous coating. 2. Dipped and wrapped one-fourth-inch-thick welded steel pipe. 3. Class 200 Type II, asbestos-cement pressure pipe. 4. Class 305 pressure rated plastic water pipe (DR 14, AWWA C900) or equal. 5. Reinforced concrete pressure pipe, steel cylinder type (AWWA C300 or C301 or C303).

C If the sewer crossing the water main does not meet the Case 1, Zone C, requirements, the water main shall have no joints in Zone C and be constructed of:

1. Ductile iron pipe with hot dip bituminous coating.
2. Dipped wrapped one-fourth-inch-thick welded steel pipe.
3. Class 305 pressure rated plastic water pipe (DR 14, AWWA C900) or equal.
4. Reinforced concrete pressure pipe, steel cylinder type (AWWA C300 or C301 or C303).

D If the sewer crossing the water main does not meet the requirements for Zone D, Case 1, the water main shall have no joints within four feet from either side of the sewer and shall be constructed of:

1. Ductile iron pipe with hot dip bituminous coating.
2. Dipped and wrapped one-fourth-inch-thick welded steel pipe.
3. Class 305 pressure rated plastic water pipe (DR 14, AWWA C900) or equal.
4. Reinforced concrete pressure pipe, steel cylinder type (AWWA C300 or C301 or C303).

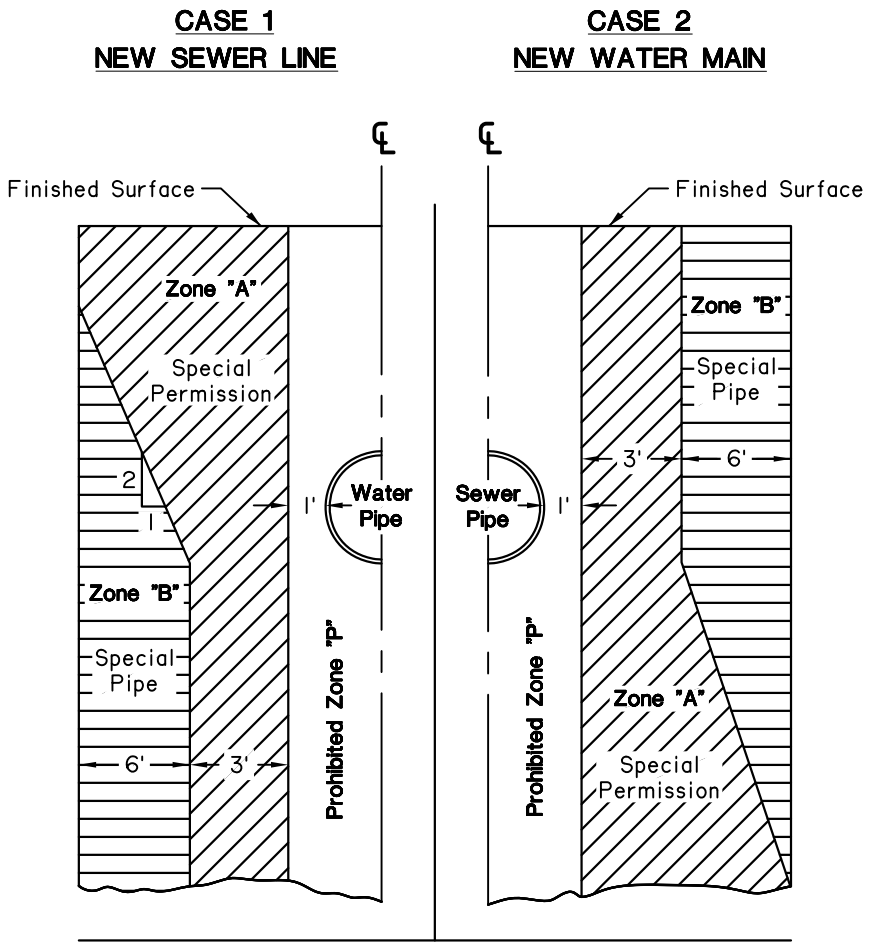

Note:

Zones identical on either side of center lines.
Zone "P" is a prohibited zone, Section 64630 (e) (2) California Administrative Code, Title 22.

Figure 1 - PARALLEL CONSTRUCTION

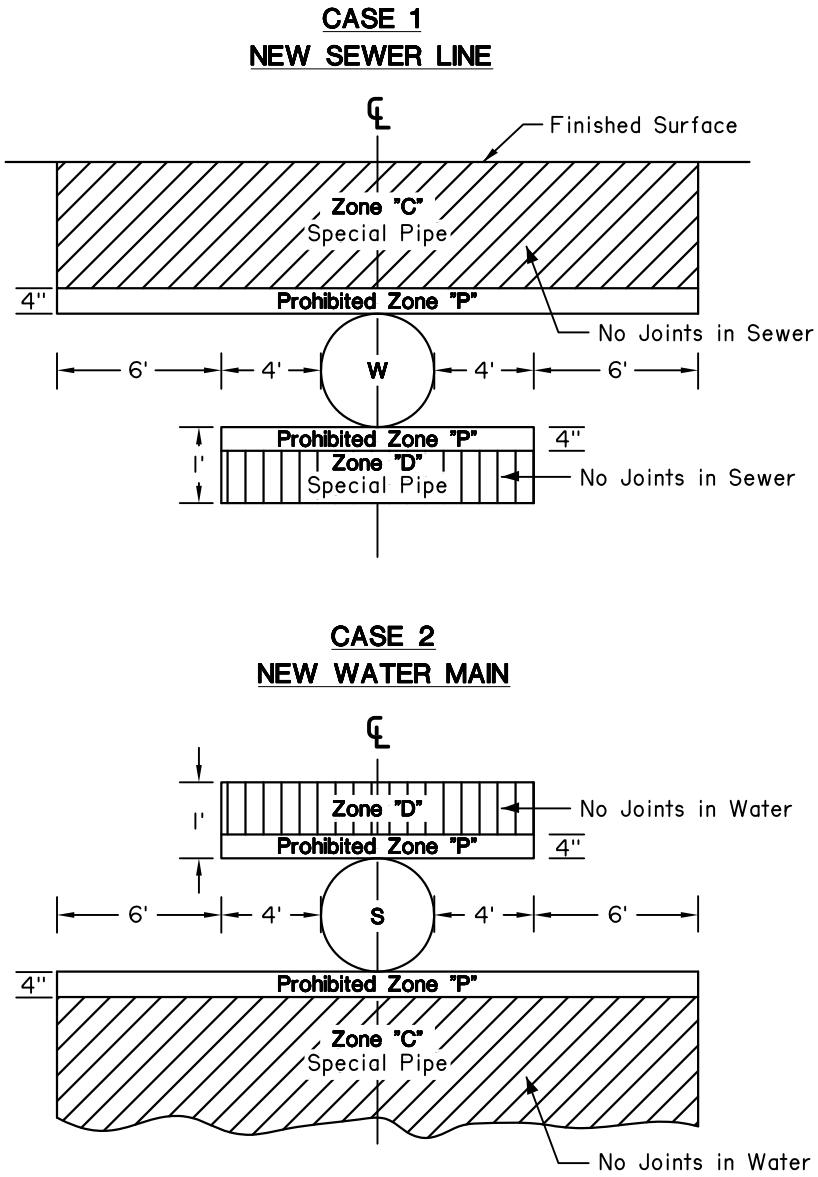

Figure 2 - CROSSINGS

THIS PAGE INTENTIONALLY LEFT BLANK.

SECTION 8 – REFERENCED CITY OF NORCO WATER UTILITY STANDARD DRAWINGS

401	RESIDENTIAL STREET PIPE TRENCH BEDDING AND BACKFILL
402	ARTERIAL STREET PIPE TRENCH BEDDING AND BACKFILL
403	TRENCH PLATING
410	1” WATER SERVICE INSTALLATION
411	1” RESIDENTIAL FIRE / DOMESTIC SERVICE INSTALLATION
412	2” WATER SERVICE INSTALLATION
413	2” RESIDENTIAL FIRE / DOMESTIC SERVICE INSTALLATION
415	3” AND LARGER METER INSTALLATION
416	4” THROUGH 12” SERVICE LATERALS AND NEW MAIN INSTALLATION
420	2” AND SMALLER SERVICE LATERAL ABANDONMENT
421	4” THROUGH 12” ABANDONMENT OF FITTINGS AND VALVES
430	STANDARD FIRE HYDRANT INSTALLATION
431	FIRE HYDRANT GUARD POST
440	2” BLOW-OFF ASSEMBLY
441	4” SAND BLOW-OFF ASSEMBLY
442	1” AND 2” COMBINATION AIR RELEASE VALVE ASSEMBLY
445	THRUST BLOCKS
450	¾” TO 2” REDUCED PRESSURE BACKFLOW PREVENTION ASSEMBLY
451	FIRELINE DOUBLE CHECK DETECTOR ASSEMBLY
460	WATER QUALITY SAMPLING STATION
470	STANDARD VALVE BOX ASSEMBLY
471	STEEL VALVE STEM EXTENSION

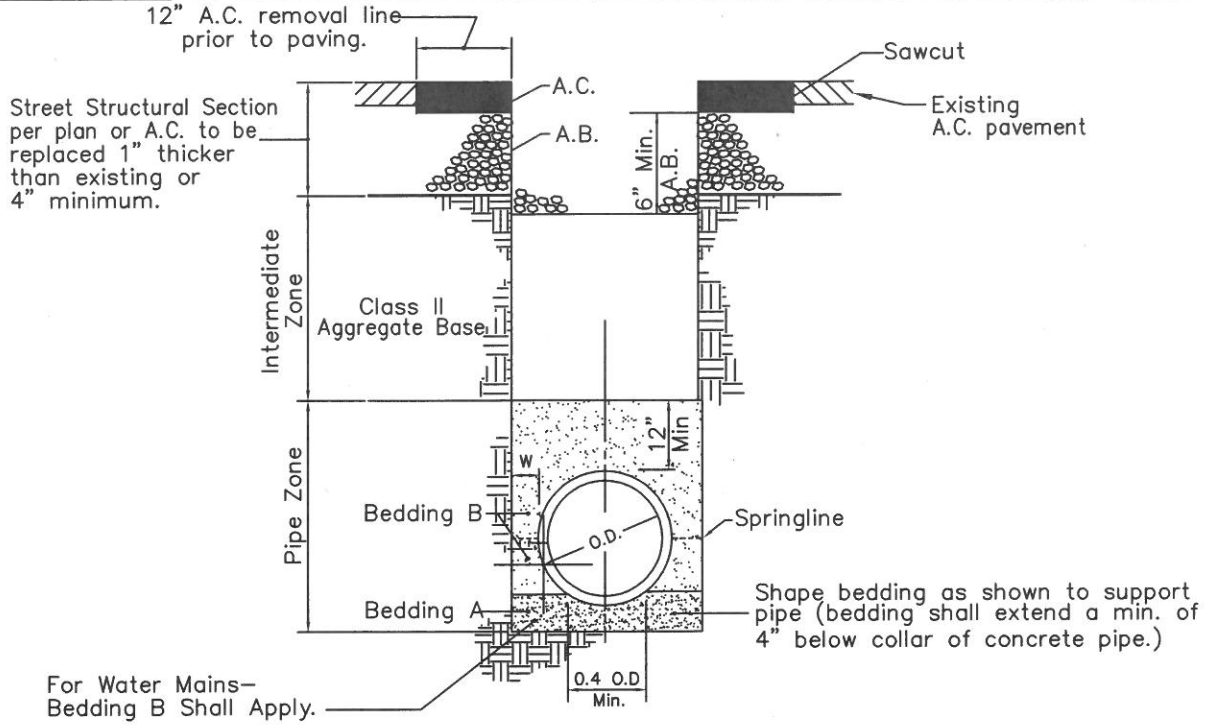

NOTES

1. Bedding A shall be composed of Class 2 Aggregate Base or as approved by the Engineer, and shall be compacted to 90% relative compaction. FOR WATER MAINS SEE BEDDING B.
2. Bedding B shall be composed of sand or other granular material as may be specified or approved by the Engineer and shall have a minimum S.E. = 30 (FOR WATER MAINS S.E. = 60); compacted to a minimum 90% relative compaction unless otherwise specified; placed in two or more lifts for O.D. > 60".
3. The Intermediate Zone backfill shall be class II aggregate base and per Section 306–1.3 of the Standard Specifications, compact lifts shall not exceed 8 inches in height. The Intermediate Zone shall be compacted to a minimum 90% relative compaction.
4. Slurry is <u>not</u> a permitted backfill material(unless pre–approved by Engineer).
5. The roadway structural section shall be replaced with 6" Class 2 Aggregate Base compacted to 95% relative compaction and an A.C. section 1" thicker than the existing section (4" minimum).
6. Where the cover is 8 feet or less "W" must be greater than or equal to 6". Where the cover is greater than 8 feet, "W" must be between 6 and 10 inches inclusive for pipes up to and including 96 inches in diameter. For pipes over 96 inches in diameter, "W" must be between 6 and 12 inches inclusive.
7. "W" shall include the thickness of any shoring.
8. Revised bedding methods shall be submitted to the Engineer for approval for any "W" over than those stated above.
9. Existing pavement shall be sawcut 2" deep minimum.
10. Telephone, Cable T.V., Electrical conduits and wirings, and Gas Mains shall be minimum of 36" below grade. Utilities in the parkway shall be minimum 30" below the flow line of the curb and gutter.
11. Asphalt mix design for the base course shall be Type III/B–2–PG 64–10 (3/4" Course) and the surface course shall be Type III/C2–PG 64–10 (1/2" Course), or as approved by the City.

REVISED DATE	**CITY OF NORCO** PUBLIC WORKS DEPARTMENT – WATER UTILITY	DRAWN SJN DATE 12–6–16
	RESIDENTIAL STREET PIPE TRENCH BEDDING AND BACKFILL	**STD. NO.** 401
	APPROVED _____ DIRECTOR OF PUBLIC WORKS **DATE** 12/6/16	

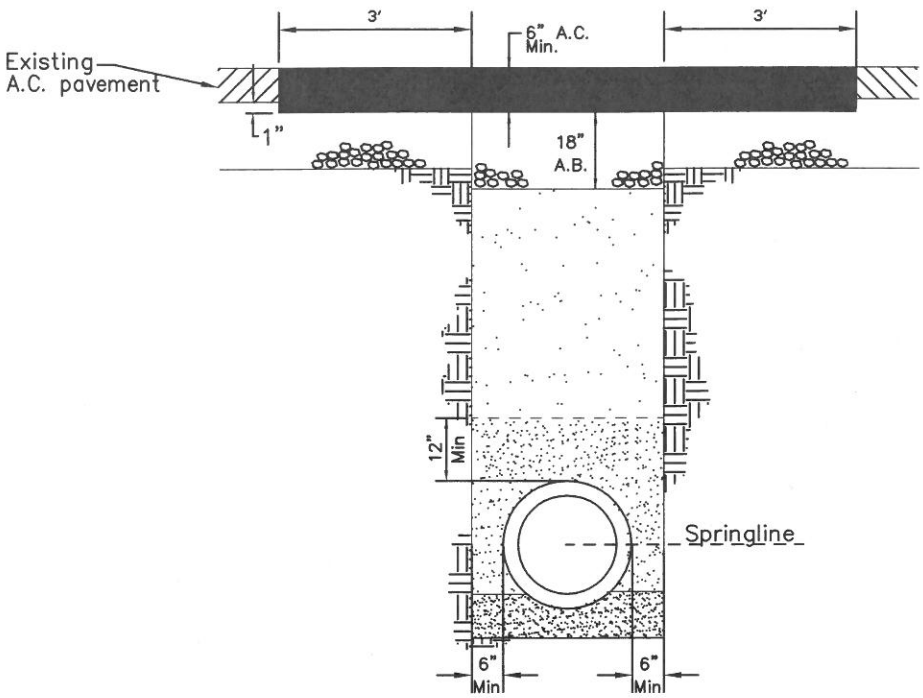

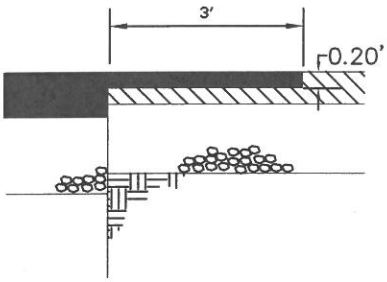

OPTION
PER CITY APPROVAL IF EXISTING STRUCTURAL SECTION FOR A.C. IS MORE THAN 4".

NOTES

1. All open–cut pipe installation crossing arterial streets will require special approval by the Director of Public Works or his/her designee.
2. Unless otherwise approved by the Public Works Department all utilities crossing arterial streets shall be constructed by jacking or approved boring method.
3. Traffic control to be approved by the Director of Public Works or his/her designee prior to any excavation.
4. Existing pavement shall be sawcut 2" deep minimum.
5. An additional 3 foot wide strip on both sides of the trench shall be removed and repaved. OPTION–In lieu of A.C. removal, existing A.C. may be cold planed a minimum depth of 0.20'.
6. The roadway structural section shall be replaced with 18" crushed aggregate base compacted to 95% relative compaction and an A.C. section 1" thicker than the existing section or 6" minimum A.C., whichever is greater.
7. Slurry is not a permitted backfill material.
8. The final A.C. cap shall be placed with a self–propelled paving machine or an approved paving device.
9. Asphalt mix design for the base course shall be Type III/B–2–PG 64–10 (3/4" Course) and the surface course shall be Type III/B3–PG 64–10 (3/4" Course), or as approved by the City.
10. Telephone, Cable T.V., Electrical conduits and wirings, and Gas Mains shall be a minimum of 36" below grade. Utilities in the parkway shall be a minimum 30" below the flow line of the curb and gutter.

REVISED	CITY OF NORCO PUBLIC WORKS DEPARTMENT – WATER UTILITY	DRAWN SJN DATE 12–6–16
DATE	ARTERIAL STREET PIPE TRENCH BEDDING AND BACKFILL	STD. NO. 402
	APPROVED _____ DIRECTOR OF PUBLIC WORKS DATE 12/6/16	

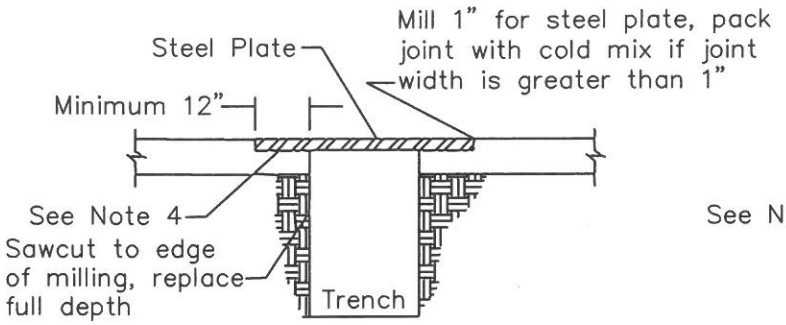

Type "A" Plating

City posted speeds of greater than 25 MPH or Bus & Truck route

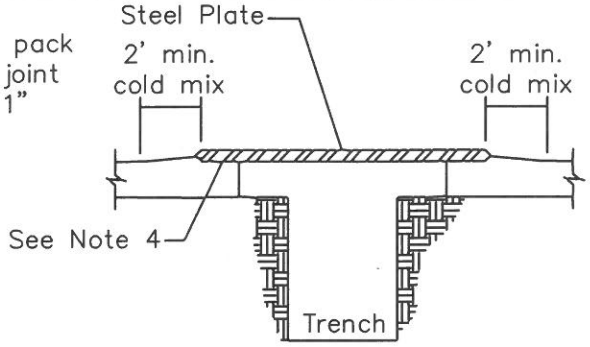

Type "B" Plating

City posted speeds of 25 MPH and under

Trench Width	Minimum Plate Thickness
10"	½"
1'–11"	¾"
2'–7"	⅞"
3'–5"	1"
5'–3"	1¼"

Notes:

1. When backfilling operations cannot be properly completed within a work day, steel plates shall be installed using either type "a" or type "b" plating methods, or as directed by city engineer. the contractor is responsible for maintenance of the steel plates, shoring or bracing of the trench and ensuring that they meet the minimum specifications of Caltrans TR–0157.

2. Use of steel plate bridging should not exceed 4 consecutive working days in any given week.

3. The trench shall be adequately shored or braced to support the steel plate bridging and traffic loads.

4. The contractor shall provide adequate overlap of plate asphalt to assure no slippage of plate and no collapsing of trench. Plates shall be pinned to the pavement surface, with a minimum of 2 dowels pre–drilled into the corners of the plate and drilled 2" into the pavement, with a minimum 1' overlap onto existing stable material. When steel plates are removed, the dowel holes in the pavement shall be backfilled with either graded fines of asphalt concrete mix, concrete slurry or an equivalent slurry that is approved by City Engineer.

5. Steel plates used in the traveled portion of the right of way shall have a surface that was manufactured with a nominal Coefficient of Friction (COF) of 0.35 as determined by California Test Method 342 or as approved by City Engineer. Surfacing requirements are not necessary for steel plates used in parking strips, on shoulders not used for turning movements, or on connecting driveways, etc. not open to the public. For spans greater than 5'–3", a structural design shall be prepared by a California Registered Civil Engineer.

6. All steel plates within the right of way, whether used in or out of the traveled way, shall be without deformation and in compliance with Section 2–01.07.

7. A rough road sign (w8–8) with black lettering on an orange background shall be used in advance of steel plates in addition to any other required construction signing.

8. "posted speed" does not include temporary construction signing.

REVISED	CITY OF NORCO PUBLIC WORKS DEPARTMENT – WATER UTILITY	DRAWN SJN DATE 12–6–16
DATE	TRENCH PLATING	STD. NO. 403
	APPROVED _____ DIRECTOR OF PUBLIC WORKS DATE 12/6/16	

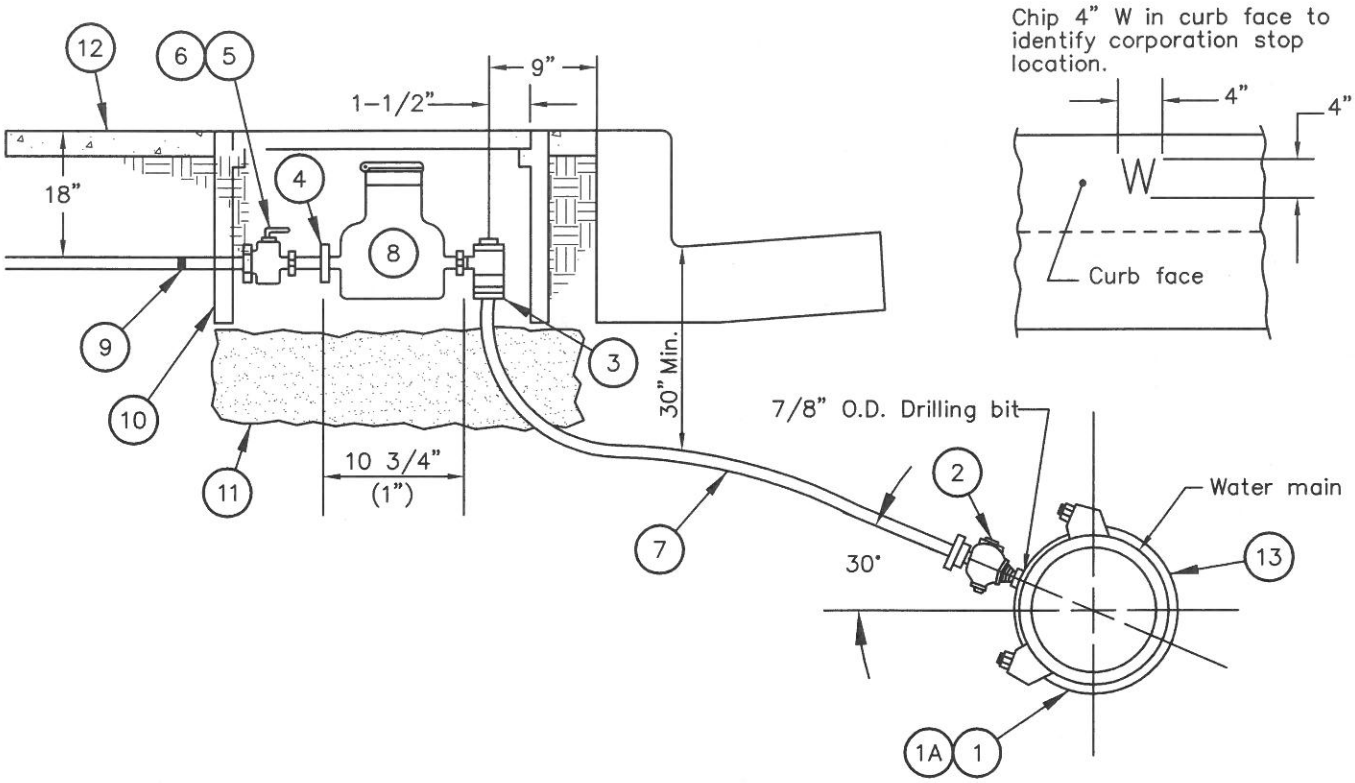

List of Materials

Item	Description	Ford	Jones	A.Y. McDonald	Mueller
1	1" Bronze double strap service saddle, F-IPT	202B	J-979	3826	BR2B Series
1A	1" Bronze double strap service saddle, F-IPT (for PVC/HDPE)	S902	J-969	3856	BR2S Series
2	1" Corporation stop, M-IPT	FB1100-4-Q	J-1935	4704BT	B-25028
3	1" Angle meter valve, less stop	BA43-444WR-Q	J-1963W	4612BT	B-24258-3-1
4	Brass Meter Coupling	C38-44-1-5-NC			H-10896N
5	1" Customer ball valve (full bore) less stop	B13-444WR	J-1908W	6111MW	B-24351-3-1
6	Valve handle 3 1/4" brass	HB-34S		6120B 5/8"	B-20298-99000
7	1" Copper tubing (Type K, soft drawn, one piece with no splices)				
8	Meter (cubic feet register)-To be provided by City (See Section 4-12)				
9	1" x 12"L Brass nipple, IPT				
10	1" Meter box assembly (See Note 3 Sheet 2 and Section 4-10.06)				
11	½" crushed rock, 8" minimum base				
12	Remove and construct sidewalk (from joint to joint) per Greenbook Standards				
13	Tapping Sleeve is allowed (no size on size) when in conformance with Section 4-06.01				

REVISED

DATE _____

CITY OF NORCO

PUBLIC WORKS DEPARTMENT – WATER UTILITY

1" WATER SERVICE INSTALLATION

APPROVED _____ **DATE** 12/6/16

DIRECTOR OF PUBLIC WORKS

DRAWN SJN

DATE 12-6-16

STD. NO.

410

Notes:

1. The water service shall extend perpendicular to street center line except in cul–de–sacs, and the tap shall be at least 24" from any adjacent joint or service.

2. Meter register to be set for curbside reading.

3. Meter box requirements:

   A. Meter boxes and vaults shall be constructed of straight wall polymer concrete. Where required, meter boxes shall have traffic loaded rating covers. All covers that are exposed to foot traffic shall have a slip resistance surface that meets the American with Disabilities Act's slip resistance requirements. Contractor is responsible for selecting a meter box or vault that is sized appropriately to accommodate all required water materials specified in Standard Drawings. The meter lid must include a properly sized cut–out to fit a Sensus Model 520M radio transceiver. Contractor is required to submit said meter box or vault to the City for review and approval prior to installation.

   Approved Manufacturer
   Armorcast Products Company

   B. Meter box cover to be flush with finished grade when in concrete, and 1/2" above grade in landscaped areas.
   C. Meter boxes shall be a minimum 6" clear from adjacent meter boxes and 5 to 7' clear from top of "X" of driveway approaches and sidewalk access ramps.
   D. Traffic rated cover to be used behind rolled curb or under traffic loading.

4. For domestic/fire combination service installations, see Standard Drawing 411.

REVISED	CITY OF NORCO PUBLIC WORKS DEPARTMENT – WATER UTILITY	DRAWN SJN DATE 12–6–16
DATE	1" WATER SERVICE INSTALLATION (DOMESTIC OR DOMESTIC/FIRE COMBINATION SERVICE)	STD. NO. 410
	APPROVED DIRECTOR OF PUBLIC WORKS DATE 12/6/16	2 of 2

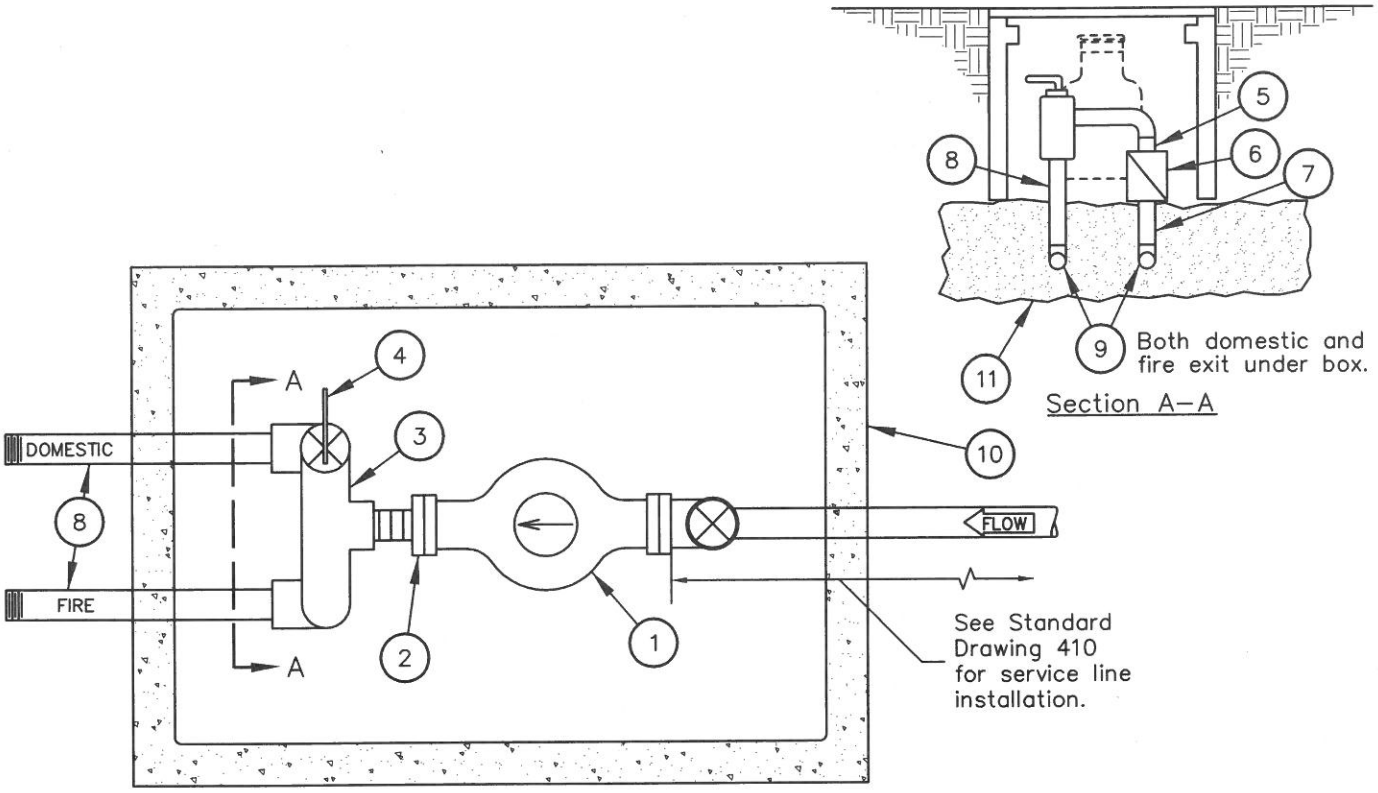

List of Materials

Item	Descriptions
1	1" Residential Fire Meter (RFM) (cubic feet register) –To be provided by City (See Section 4–12)
2	1" Meter coupling, Ford C38–44–2.625A, Jones J–130, McDonald 4620 1, Mueller H10890N.
3	1" Residential fire service connection, Ford LTBA443–444W–AWT–Q–NL, Jones Residential Fire Service Connection, or approved equal.
4	Valve handle, 3 1/4" brass, Ford HB–34S, Jones J–2815, McDonald 6120B 1", Mueller B–20298–99000.
5	1" Close brass nipple, IPT.
6	1" NIBCO 125# swing check T–413 Buna–N disc or approved equal.
7	1" x 8"L Brass nipple, IPT.
8	1" x 12"L Brass nipple, IPT.
9	1" – 90 Degree brass elbow, F–IPT.
10	Meter box assembly (See Note 5 on Sheet 2 & Section 4–10.06).
11	½" crushed rock, 8" minimum base.

REVISED	CITY OF NORCO PUBLIC WORKS DEPARTMENT – WATER UTILITY	DRAWN SJN DATE 12–6–16
DATE	1" RESIDENTIAL FIRE/DOMESTIC SERVICE INSTALLATION	STD. NO. 411
	APPROVED _____ DIRECTOR OF PUBLIC WORKS DATE 12/6/16	1 of 2

Notes:

1. See other sections of these Specifications for related requirements, or Special Provision if applicable.

2. The water service shall extend perpendicular to street center line except in cul–de–sacs, and the tap shall be at least 24" from any adjacent joint or service.

3. Meter (cubic feet register) to be set for curbside reading.

4. Domestic service line from meter to house shall be sized to Plumbing Code requirements. Fire sprinkler service line sizing shall be approved by Fire Marshal.

5. Approved meter box assemblies for 1" Residential Fire/Domestic Service installation:

   Meter boxes and vaults shall be constructed of straight wall polymer concrete. Where required, meter boxes shall have traffic loaded rating covers. All covers that are exposed to foot traffic shall have a slip resistance surface that meets the American with Disabilities Act's slip resistance requirements. Contractor is responsible for selecting a meter box or vault that is sized appropriately to accommodate all required water materials specified in Standard Drawings. The meter lid must include a properly sized cut–out to fit a Sensus Model 520M radio transceiver. Contractor is required to submit said meter box or vault to the City for review and approval prior to installation.

   Approved Manufacturer
   Armorcast Products Company

6. Meter box requirements:

   Meter box cover to be flush with finished grade when in concrete, and 1/2" above grade in landscaped areas.

   Do not notch out meter box or extension. Customer side plumbing shall exit under bottom of meter box or extension.

   Meter boxes shall be a minimum 6" clear from adjacent meter boxes, top of "x" of driveway approaches, and sidewalk access ramps.

REVISED	CITY OF NORCO PUBLIC WORKS DEPARTMENT – WATER UTILITY	DRAWN SJN DATE 12–6–16
DATE	1" RESIDENTIAL FIRE/DOMESTIC SERVICE INSTALLATION	STD. NO. 411
	APPROVED _____ DIRECTOR OF PUBLIC WORKS DATE 12/6/16	2 of 2

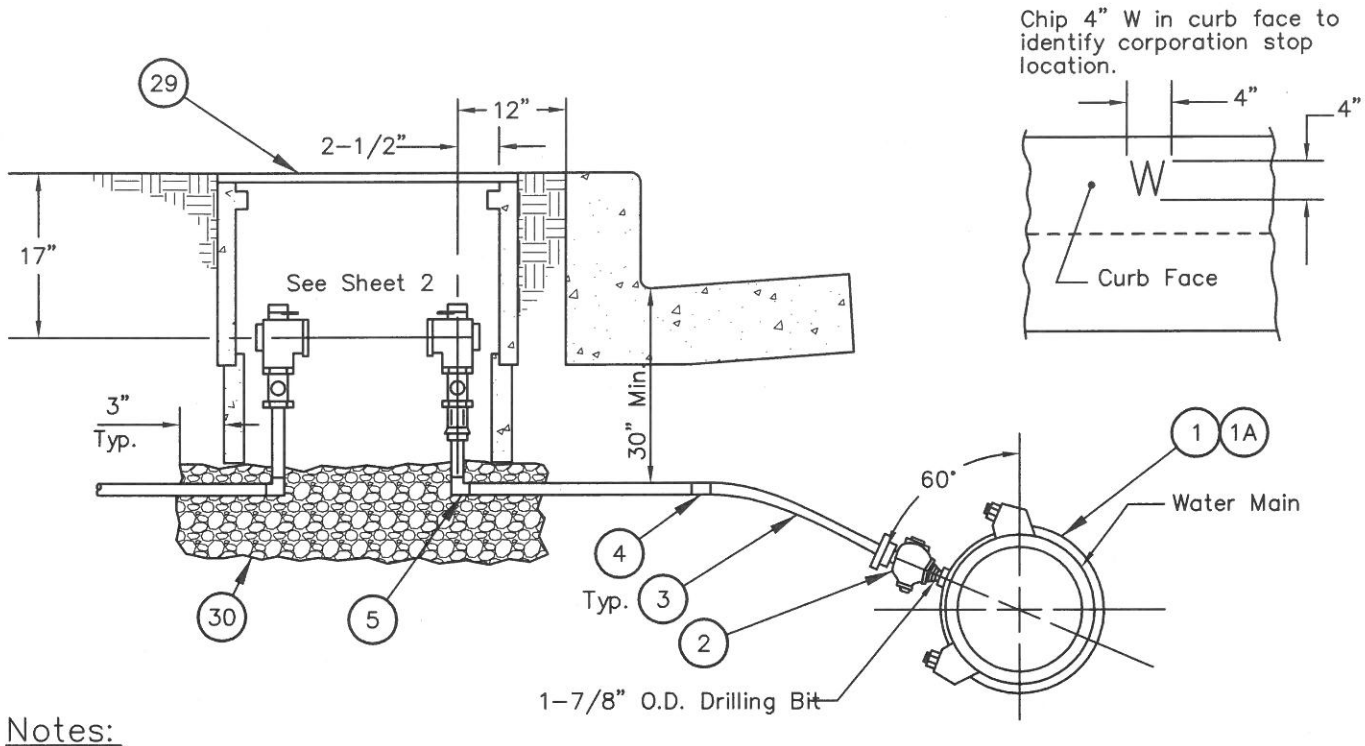

Notes:

1. The water service shall extend perpendicular to street center line except in cul-de-sacs, and the tap shall be at least 24" from any adjacent joint or service.

2. Meter (cubic feet register) to be set for curbside reading. Meter to be provided by the City (See Section 4-12)

3. All bolts and nuts to have electrodeposited coatings of zinc, bolts must be 5/8" X 3"L.

4. A traffic load rating cover shall be used in areas without curb, in areas with rolled curb, or where the meter is located within 7 feet of the BCR, ECR or a driveway approach.

5. Meter box cover to be flush with the finished grade in concrete, and 1/2" above grade in landscaped areas. Meter boxes shall be a minimum of 8" clear from adjacent meter boxes, and 7 feet clear from top of "X" of driveway approaches and sidewalk access ramp. Do not notch out meter box extension. Customer plumbing shall exist under bottom of extension.

6. Meter boxes and vaults shall be constructed of straight wall polymer concrete. Where required, meter boxes shall have traffic loaded rating covers. All covers that are exposed to foot traffic shall have a slip resistance surface that meets the American with Disabilities Act's slip resistance requirements. Contractor is responsible for selecting a meter box or vault that is sized appropriately to accommodate all required water materials specified in Standard Drawings. The meter lid must include a properly sized cut-out to fit a Sensus Model 520M radio transceiver. Contractor is required to submit said meter box or vault to the City for review and approval prior to installation.

   Approved Manufacturer
   Armorcast Products Company

7. For domestic/fire combination service installations, see Standard Drawing 413.

REVISED	CITY OF NORCO PUBLIC WORKS DEPARTMENT – WATER UTILITY	DRAWN SJN DATE 12-6-16
DATE	2" WATER SERVICE INSTALLATION	STD. NO. 412
	APPROVED _____ DIRECTOR OF PUBLIC WORKS DATE 12/6/16	1 of 3

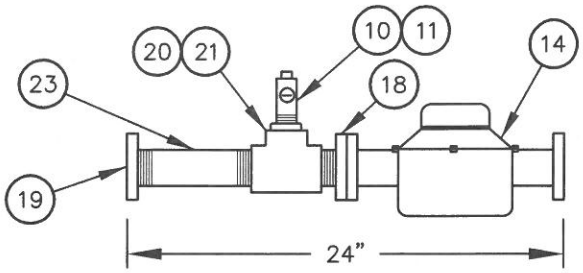

1 1/2" Disc Meter

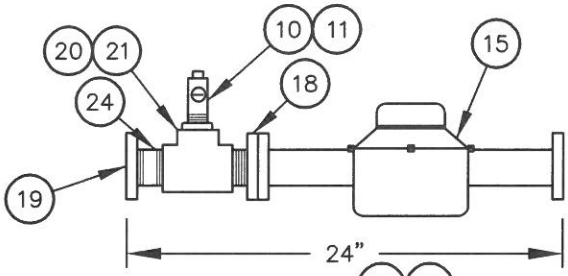

2" Disc Meter

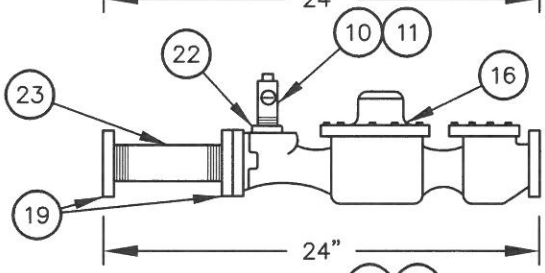

2" Turbo Meter

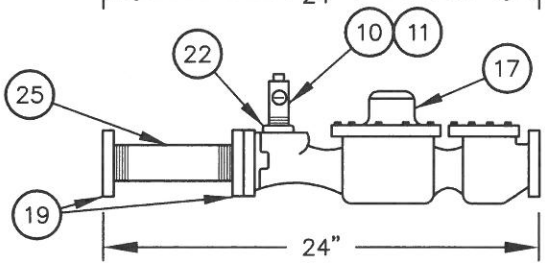

2" Compound Meter

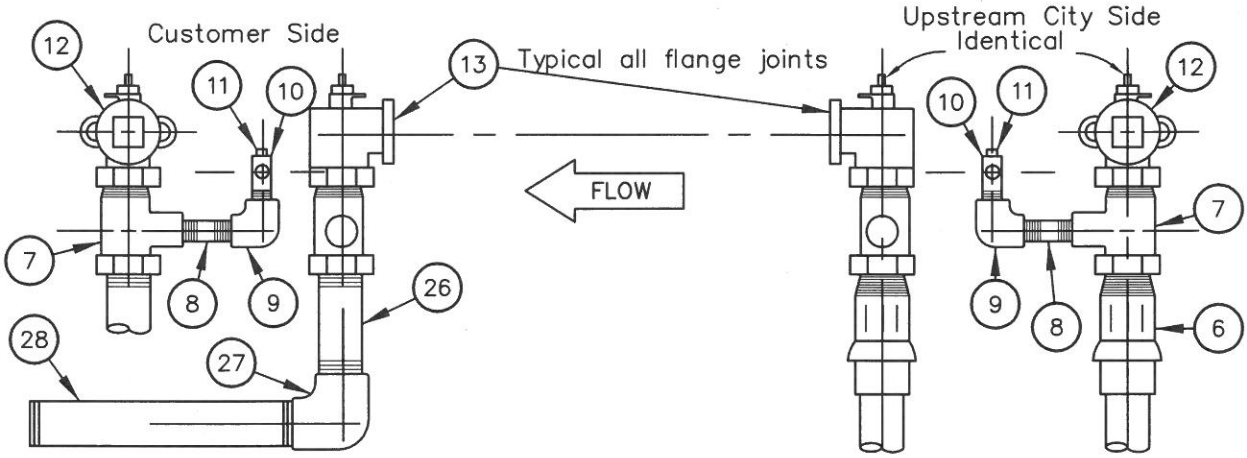

REVISED	CITY OF NORCO PUBLIC WORKS DEPARTMENT – WATER UTILITY	DRAWN SJN DATE 12-6-16
DATE	2" WATER SERVICE INSTALLATION	STD. NO. 412
	APPROVED DIRECTOR OF PUBLIC WORKS DATE 12/6/16	2 of 3

List of Materials

Item	Descriptions	Ford	Jones	A.Y. McDonald	Mueller
1	2" bronze double strap service saddle, F–IPT.	202BS	J–979	3826	BR2B
1A	2" bronze double strap service saddle, F–IPT (for PVC/HDPE).	S902	J–969	3856	BR2S
2	2" corporation stop, IPT. X compression.	FB110–7–NL	J–1935SG	4704BT	B–25028
3	2" copper pipe, type K soft drawn.				
4	2" copper coupling with stop –– Use 95% silver solder only. Use when horizontal run of service exceeds 20 ft.				
5	2" – 90° copper elbow –– use 95% silver solder only.				
6	2" brass coupling, M–IPT X compression.	C84–77–G	J2605SG	4753T	H–15428
7	2" X 1" Tee: F–IPTxM–IPTx1" F–IPT.	TI81–774	–	–	–
8	1" X 3"L brass nipple, IPT.				
9	1" – 90° brass elbow, F–IPT.				
10	1" brass ball valve with locking ears, <u>less stop</u>.	B81–444WR M–IPTxF–IPT	J–1900W	–	B–20200–3 F–IPTxF–IPT w/ close brass nipple
11	1" brass plug, IPT.				
12	2" angle ball valve, F–IPT X oval flange with slotted holes and locking ears.	BFA13–777WR	–	4614B	B–24286–3
13	1/8" full face cloth or drop–in inserted rubber flange gasket.				
14	1–1/2" disc meter (see Section 4–12).	Meter type to be determined and provided by the City			
15	2" disc meter (see Section 4–12).				
16	2" turbo meter (see Section 4–12).				
17	2" compound meter (see Section 4–12).				
18	2" X 2" brass flange M–IPT X oval flange with slotted holes.	CF38–77–1937	J–129–M	610M (2"x1–15/16")	–
19	2" X 2" brass flange F–IPT X oval flange with slotted holes	CF31–77	J–129	610F	–
20	2" brass tee, F–IPT.				
21	2" X 1" brass bushing, IPT.				
22	1–1/2" X 1" brass bushing, M–IPT X F–IPT.				
23	2" X 6"L brass nipple, IPT.				
24	2" X 2"L brass nipple, IPT.				
25	2" X 7–1/2"L brass nipple, IPT.				
26	2" X 10"L brass nipple, IPT.				
27	2" – 90° brass elbow, F–IPT.				
28	2" X 12"L brass nipple, IPT.				
29	Meter box (see Section 4–10.06).				
30	1/2" crushed rock, 8" base.				

REVISED

DATE _____

CITY OF NORCO

PUBLIC WORKS DEPARTMENT – WATER UTILITY

2" WATER SERVICE INSTALLATION

APPROVED _____ **DATE** 12/6/16

DIRECTOR OF PUBLIC WORKS

DRAWN SJN

DATE 12–6–16

STD. NO.

412

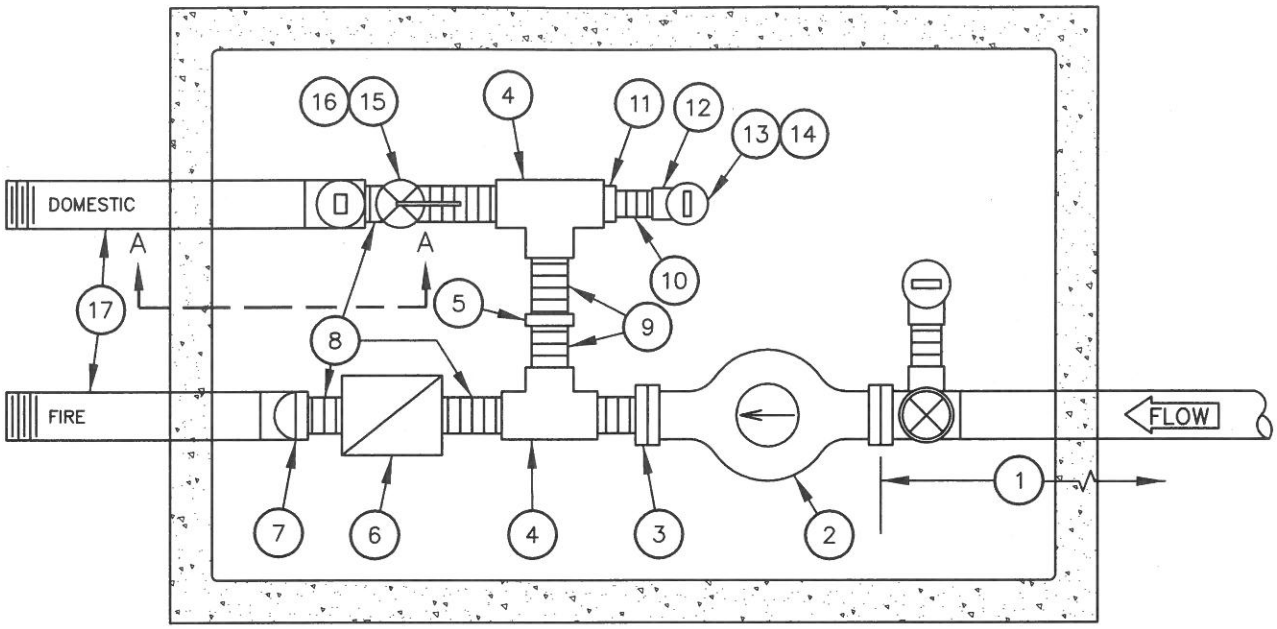

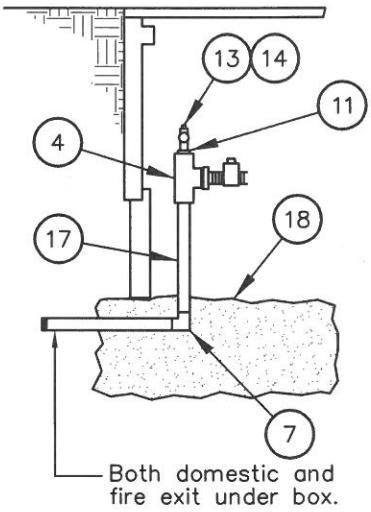

Section A–A

List of Materials

Item	Descriptions
1	See Standard Drawing 412 for service line installation
2	2" compact RFM meter (cubic feet register). To be provided by the City (See Section 4–12)
3	2" x 2" Brass flange M–IPT x oval flange, with slotted holes, Ford CF38–77–1.937, Jones J–129–M, McDonald 610M 2"x1 15/16.
4	2" Brass tee, F–IPT.
5	2" Brass union, F–IPT.
6	2" NIBCO class 125 bronze check T–413–B (Buna–N) (W) disc.
7	2" – 90 Degree Brass elbow, IPT.
8	2" Close brass nipple, IPT.
9	2" x 3"L Brass nipple, IPT.
10	1" x 3"L Brass nipple, IPT.
11	2" x 1" Brass reducing bushing, M–IPT x F–IPT.
12	1" – 90 Degree Brass elbow, IPT.
13	1" Ball valve brass with locking ears, Ford B81–444–WR M–IPT x F–IPT, McDonald 6117W M–IPT x F–IPT, Jones J–1900W and Mueller B–20200–3 F–IPT x F–IPT w/ close brass nipple.
14	1" Brass plug, IPT.
15	Valve handle, 3 1/4" brass, Ford HB–34S, Jones J–2815, McDonald 6120B 1", Mueller B–20298–99000.
16	2" Ball valve brass with locking ears, Ford B81–777–WR M–IPT x F–IPT, McDonald 6117W M–IPT x F–IPT, Jones J–1900W and Mueller B–20200–3 F–IPT x F–IPT w/ close brass nipple.
17	2" x 12"L Brass nipple, IPT.
18	½" crushed rock, 8" minimum base.

REVISED

DATE

CITY OF NORCO

PUBLIC WORKS DEPARTMENT – WATER UTILITY

2" RESIDENTIAL FIRE/DOMESTIC SERVICE INSTALLATION

APPROVED _____ DIRECTOR OF PUBLIC WORKS DATE 12/6/16

DRAWN SJN

DATE 12–6–16

STD. NO.

413

Notes:

1. See other sections of these Specifications for related requirements, or Special Provision if applicable.

2. The water service shall extend perpendicular to street center line except in cul–de–sacs, and the tap shall be at least 24" from any adjacent joint or service.

3. Flange gaskets shall be full face or drop–in 1/8" thick cloth inserted rubber.

4. All bolts and nuts to have electrodeposited coatings of zinc. Bolts must be 5/8" x 3"L.

5. Meter (cubic feet register) to be set for curbside reading. To be provided by the City (See Section 4–12)

6. Domestic service line from meter to house shall be sized to Plumbing Code requirements. Fire sprinkler service line sizing shall be approved by Fire Marshal.

7. Meter box requirements:

   Meter box cover to be flush with finished grade when in concrete, and 1/2" above grade in landscaped areas.

   Do not notch out meter box or extension. Customer side plumbing shall exit under bottom of meter box or extension.

   Meter boxes shall be a minimum 6" clear from adjacent meter boxes, top of "x" of driveway approaches, and sidewalk access ramps.

8. Meter boxes and vaults shall be constructed of straight wall polymer concrete. Where required, meter boxes shall have traffic loaded rating covers. All covers that are exposed to foot traffic shall have a slip resistance surface that meets the American with Disabilities Act's slip resistance requirements. Contractor is responsible for selecting a meter box or vault that is sized appropriately to accommodate all required water materials specified in Standard Drawings. The meter lid must include a properly sized cut–out to fit a Sensus Model 520M radio transceiver. Contractor is required to submit said meter box or vault to the City for review and approval prior to installation.

REVISED	CITY OF NORCO PUBLIC WORKS DEPARTMENT – WATER UTILITY	DRAWN SJN DATE 12–6–16
DATE	2" RESIDENTIAL FIRE/DOMESTIC SERVICE INSTALLATION	STD. NO. 413
	APPROVED _____ DIRECTOR OF PUBLIC WORKS DATE 12/6/16	2 of 2

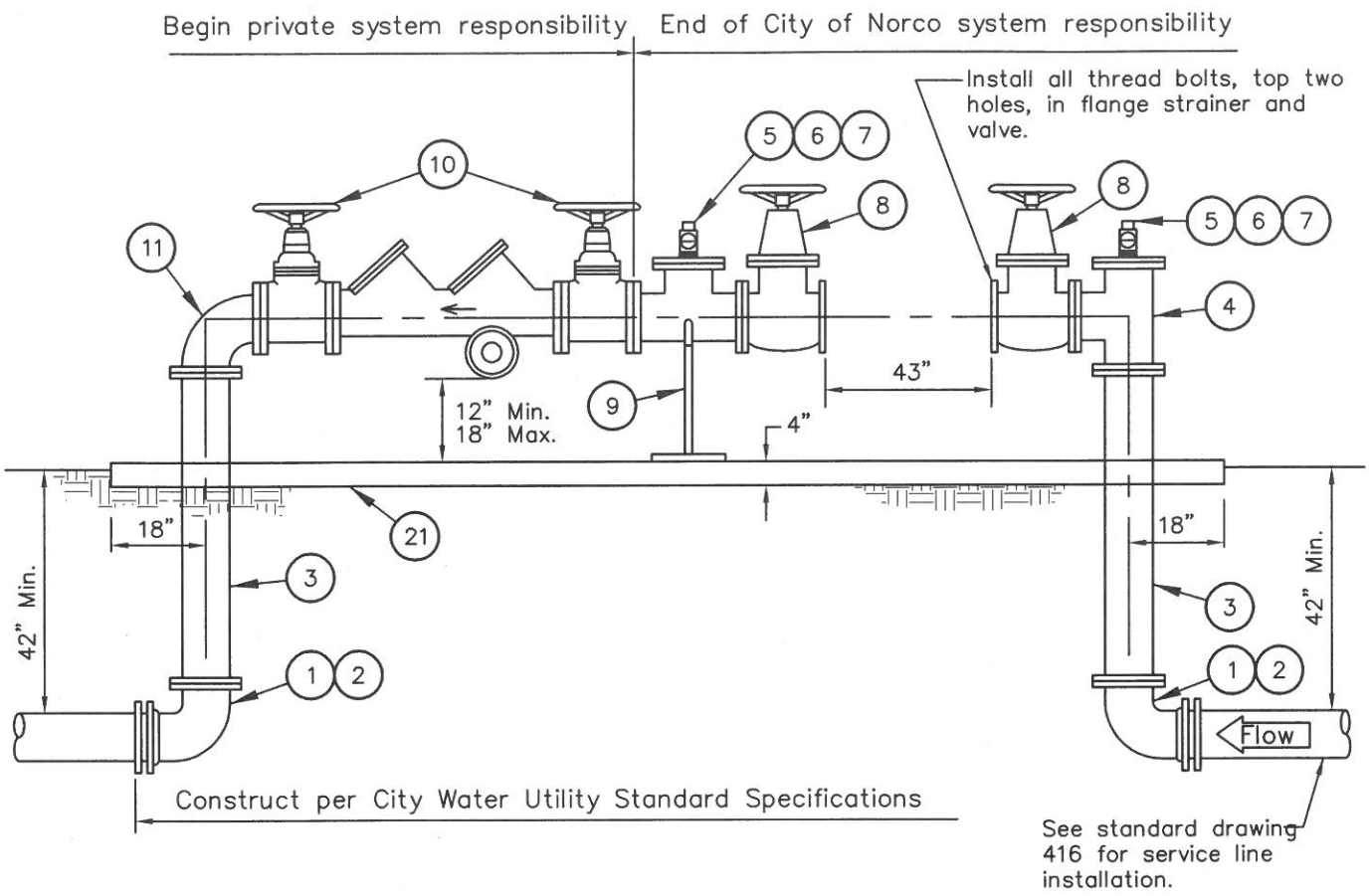

Elevation

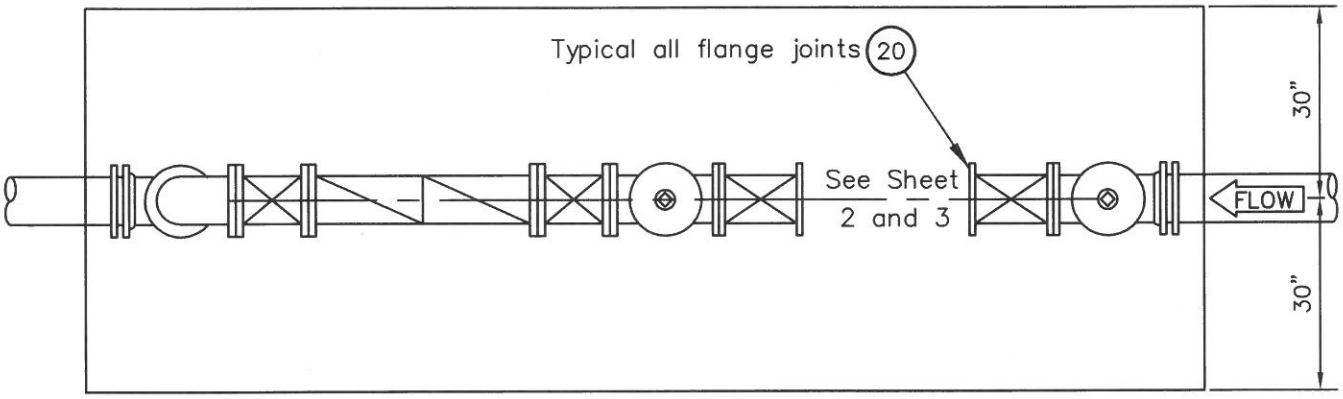

Plan View

REVISED	CITY OF NORCO PUBLIC WORKS DEPARTMENT – WATER UTILITY	DRAWN SJN DATE ~~12-16-16~~
DATE	3" AND LARGER METER INSTALLATION	STD. NO. 415
	APPROVED _____ DIRECTOR OF PUBLIC WORKS DATE 12/6/16	1 of 3

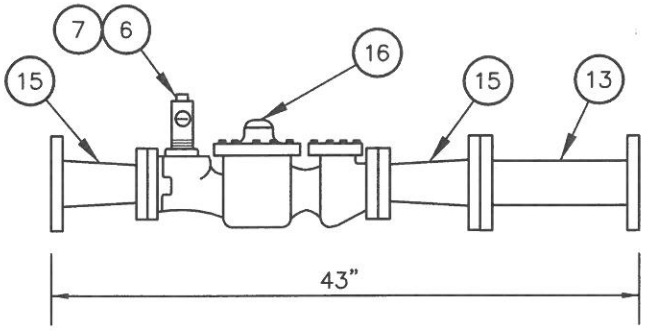

3" Compound Meter

Flow

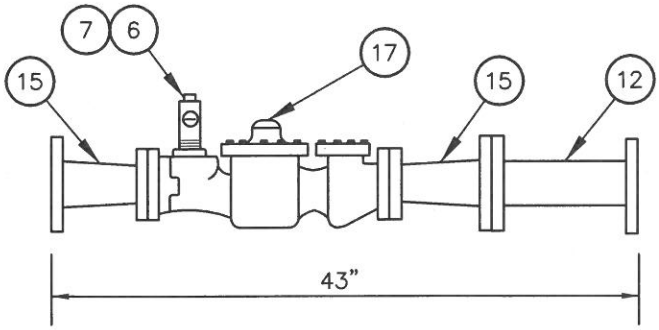

3" Turbo Meter

Flow

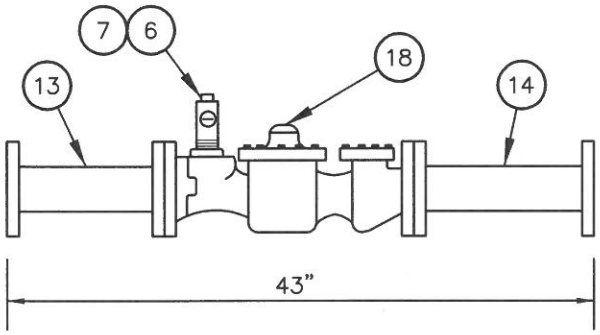

4" Compound Meter

Flow

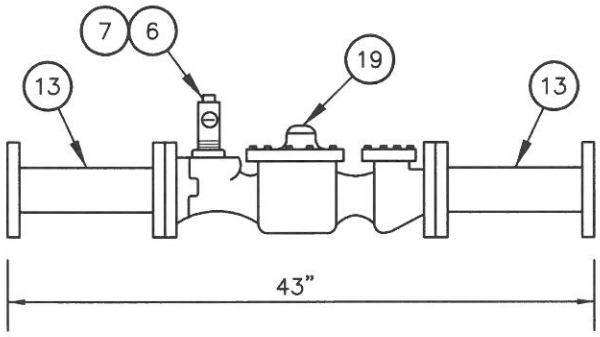

4" Turbo Meter

FLOW

See Sheet 3 for construction notes.

REVISED	CITY OF NORCO PUBLIC WORKS DEPARTMENT – WATER UTILITY	DRAWN SJN DATE 12-6-16
DATE	3" AND LARGER METER INSTALLATION	STD. NO. 415
	APPROVED DIRECTOR OF PUBLIC WORKS DATE 12/6/16	2 of 3

List of Materials

Item	Descriptions	
1	4" – 90° D.I. Elbow, FLG. X M.J.	
2	Restraint device per Section 4–04.	
3	4" D.I.P. Spool, Class 53, FLG. (order to size)	
4	4" Compact D.I. TEE, FLG.	
5	2" X 9" O.D. Reducing flange.	
6	2" Brass ball valve, M–IPT X F–IPT 2" Brass ball valve, M–IPT X F–IPT, Ford B81–777WR, Jones J–1900W and Mueller B–20200–3 F–IPT x F–IPT.	
7	2" Brass plug, IPT.	
8	4" Resilient–seated gate valve, non–rising stem, FLG with hand wheel. See Section 4–08.02 of these Specifications for approved gate valves and other requirements.	
9	Adjustable pipe saddle support, bolted to the concrete pad.	
10	4" Reduced pressure principle backflow assembly. See Section 3 of these Specifications.	
11	4" – 90° Compact D.I. Elbow, FLG.	
12	4" X 8"L D.I.P. Spool, Class 53, FLG.	
13	4" X 10"L D.I.P. Spool, Class 53, FLG.	
14	4" X 13"L D.I.P. Spool, Class 53, FLG.	
15	4" X 3" X 8"L D.I. concentric reducer, FLG.	
16	3" Compound meter (see Section 4–12).	Meter type to be determined and provided by the City
17	3" Turbo meter (see Section 4–12).	
18	4" Compound meter (see Section 4–12).	
19	4" Turbo meter (see Section 4–12).	
20	1/8" Full face cloth inserted rubber flange gasket.	
21	Concrete pad, Class 520–C–2500 (light broom finish), 2% slope towards sidewalk.	

Notes:

1. All steel bolts and nuts to have electrodeposited coating of zinc.
2. See Section 5–10 of these specifications for painting requirements.
3. Large meter assemblies installed in easements, roads and streets without curbs or with rolled curbs shall be protected by guard posts as shown on plans or as directed by Engineer per Standard Drawing 431.
4. Location of the large meter/backflow device assembly, and all parts must be approved by Engineer prior to installation. Failure to comply may result in project delays to correct all unacceptable/unapproved work. A wye strainer or hose bibb are not allowed to be installed on backflow assembly piping.
5. Spool lengths are approximate to achieve overall length requirement of 43".
6. All service connections above 4" in size shall be reviewed by the Public Works Department for approval.

REVISED	CITY OF NORCO PUBLIC WORKS DEPARTMENT – WATER UTILITY	DRAWN SJN DATE 12–6–16
DATE	3" AND LARGER METER INSTALLATION	STD. NO. 415
	APPROVED DIRECTOR OF PUBLIC WORKS DATE 12/6/16	3 of 3

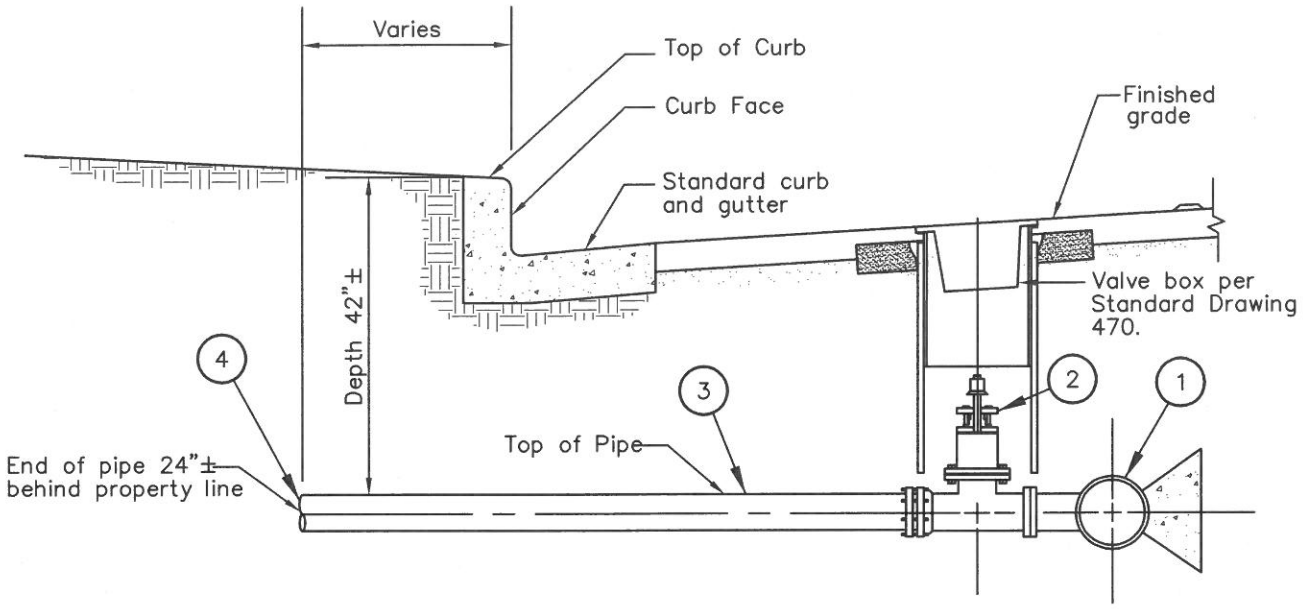

List of Materials

Item	Descriptions
1	Tee (main size x lateral size) (M.J. x M.J. x FLG.) for new main installation. For existing main see Section 4–06 of these Specifications for approved stainless steel tapping sleeves.
2	Gate valve, (FLG. x M.J.) (pipe size) resilient seat. See Section 4–08 of these Specifications for acceptable valves.
3	Ductile iron pipe (pipe size––length varies).
4	If above ground service installation is not immediately installed with lateral installation, then 2" blow–off assembly will be required per Standard Drawing 440.

Notes:

1. See Section 5–03.04 of these Specifications for polyethylene protective wrapping requirements.
2. All mechanical and push joints between main line and above ground service installation shall be restrained per Section 4–04 of these Specifications.
3. 45 degree elbows (M.J.) may be necessary to attain desired elevation behind curb. When fittings are needed to change elevation, restrain per Section 4–04.

REVISED	CITY OF NORCO PUBLIC WORKS DEPARTMENT – WATER UTILITY	DRAWN SJN DATE 12–6–16
DATE	4" THROUGH 12" SERVICE LATERAL AND NEW MAIN INSTALLATION	STD. NO. 416
	APPROVED _____ DIRECTOR OF PUBLIC WORKS DATE 12/6/16	

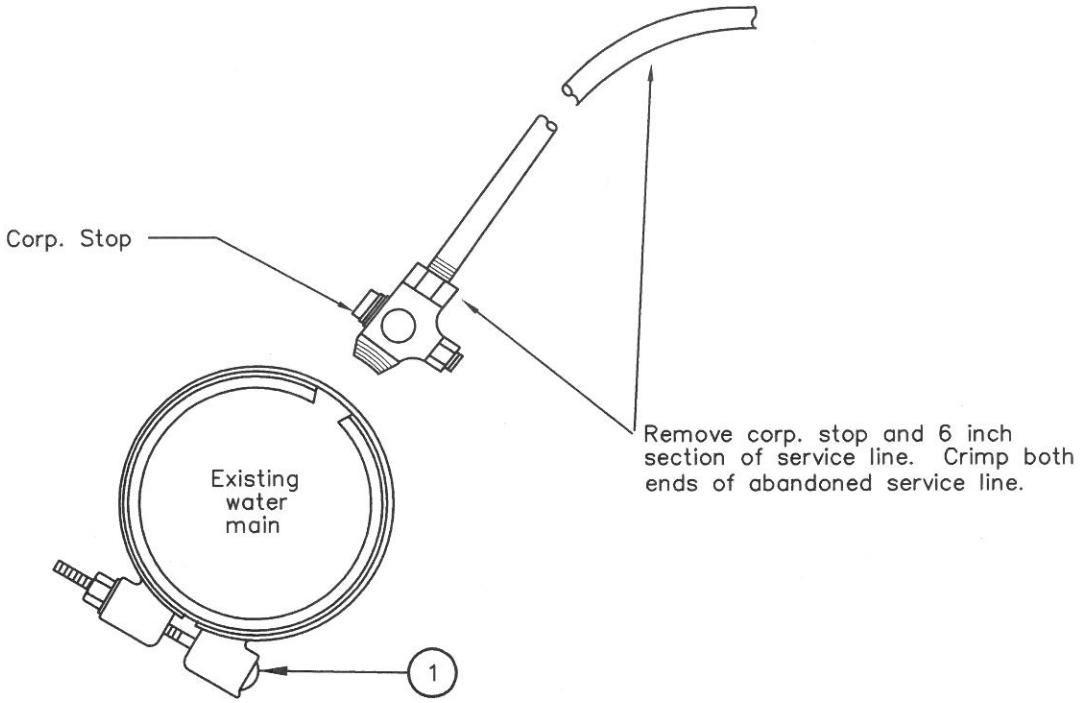

List of Materials

Item	Description
1	Stainless steel repair clamp, see Section 4–06.02 of these Specifications for approved manufacturer.

Notes:

1. City of Norco street encroachment and water permit are required from Public Works Department.

2. Customer must request turn–off and meter removal from Water Utility Division at (951) 270–5654. Water meter must be removed by City 24 hours before water service is to be abandoned or construction begins.

3. Location of corporation stop to be determined by Contractor.

4. Remove abandoned angle meter stop.

5. Water meter box to be removed:
   a. Parkway – Fill hole with clean dirt and grade level.
   b. Sidewalk – Sawcut to the closest score mark on each side of meter box and pour sidewalk to meet City Standards.

6. Contractor shall submit to Engineer for approval a notification letter at least 5 working days prior to shutdown. The contractor shall be responsible for dewatering and City will send notification letters to all affected users 2 working days prior to outages. The City cannot guarantee a complete water shutdown of existing main. Contractor is responsible for dewatering if necessary. Contractor shall excavate 1 working day in advance of abandonment and plate excavation per Engineer.

REVISED	CITY OF NORCO PUBLIC WORKS DEPARTMENT – WATER UTILITY	DRAWN SJN DATE 12–6–16
DATE	2" AND SMALLER SERVICE LATERAL ABANDONMENT	STD. NO. 420
	APPROVED _____ DIRECTOR OF PUBLIC WORKS DATE 12/6/16	

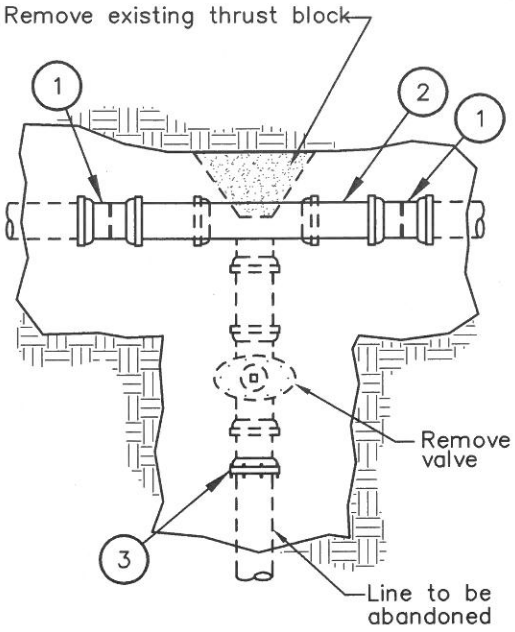

Removal of existing non-flanged tee and valve

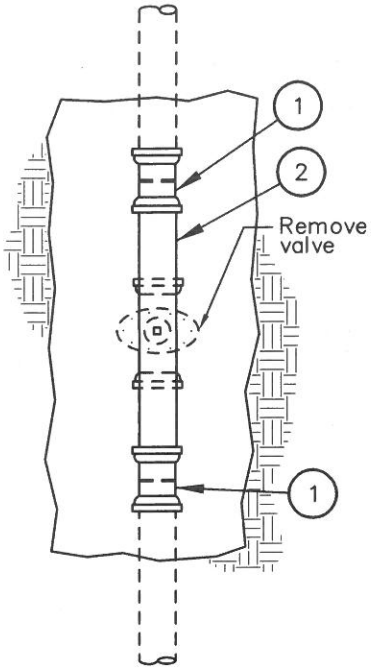

Removal of existing inline valve

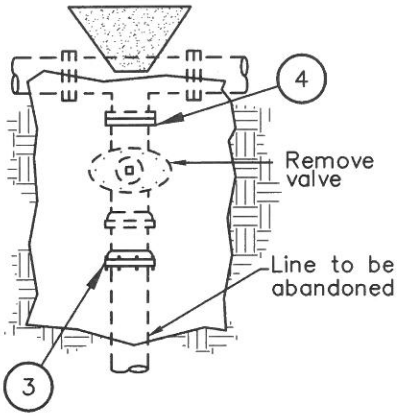

Removal of existing flanged valve

List of Materials

Item	Description
1	D.I. solid sleeve, M.J., see Section 4-06 of these Specifications.
2	D.I. pipe, cut to fit.
3	M.J. cap.
4	D.I. blind flange.

Notes:

1. See Section 5-03.04 of these Specifications for polyethylene protective wrapping requirements.
2. Pothole existing valve and tee connection prior to cutting pipe, verify O.D. of pipe. Contractor shall excavate 1 working day in advance of abandonment and plate excavation per Engineer.
3. Cut existing pipe, remove valve, valve can and thrust blocks as required. Install ductile iron pipe with restrained solid sleeve or transition coupling as required.
4. An existing flange valve may be removed and a blind flange installed if approved by Engineer. When existing flange bolts are in poor condition and/or the existing tee run joints are caulked, then removal of tee and valve is required per detail above.

REVISED	CITY OF NORCO PUBLIC WORKS DEPARTMENT – WATER UTILITY	DRAWN SJN DATE 12-6-16
DATE	4" THROUGH 12" ABANDONMENT OF FITTINGS AND VALVES	STD. NO. 421
	APPROVED _____ DIRECTOR OF PUBLIC WORKS DATE 12/6/16	

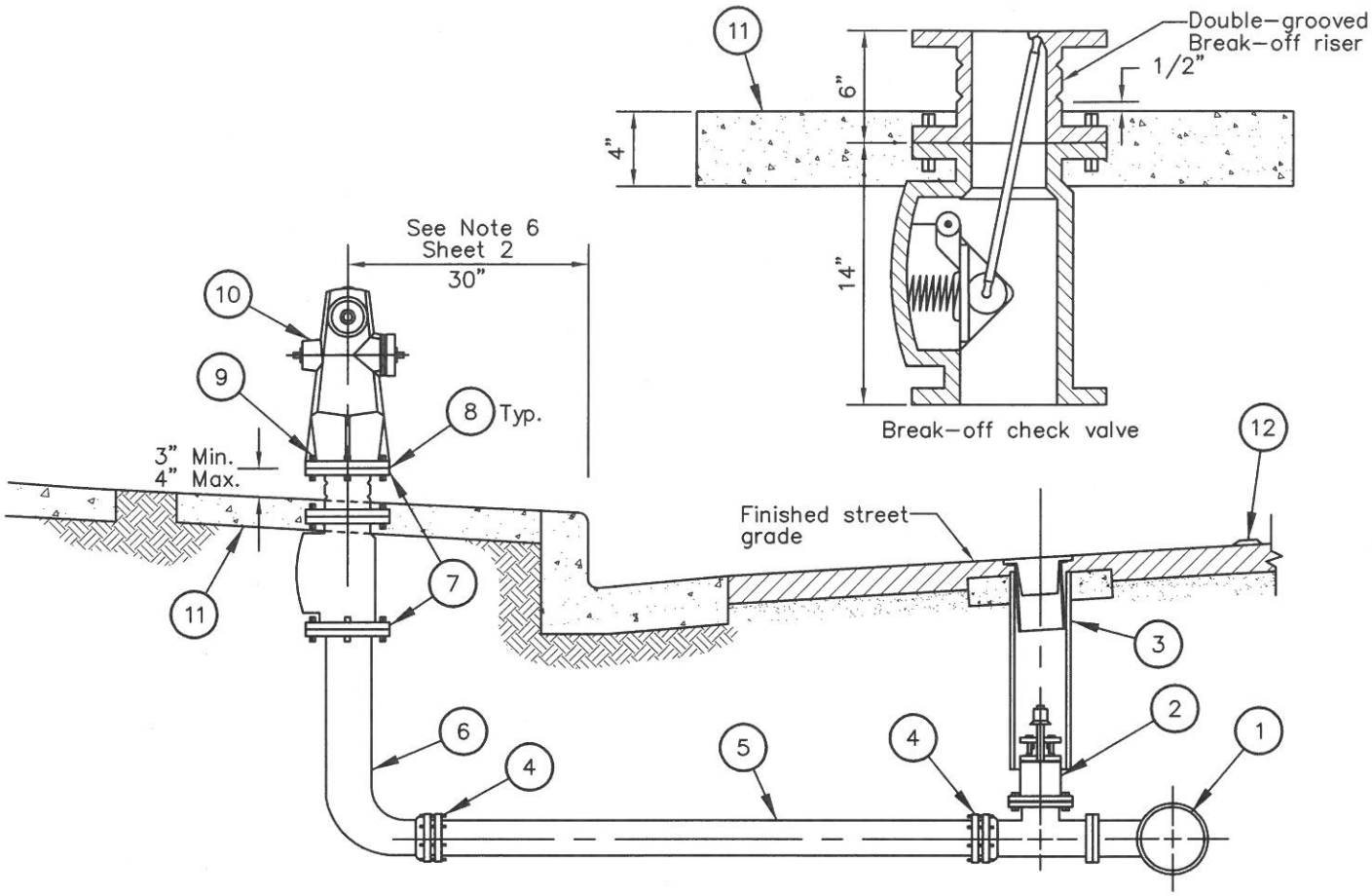

List of Materials

Item	Descriptions
1	Tee, main size X 6" (M.J. X M.J. X FLG.) for new main installation. For existing main, see Section 4-06.01 for tapping sleeve requirements.
2	6" gate valve (FLG. X M.J.) resilient-seated (see Section 4-08.02).
3	Valve box per Standard Drawing 470.
4	Restraint device (see Section 4-04).
5	6" D.I. pipe, thickness class 52, with restrained joints (see Section 4-04).
6	6" X required length D.I. fire hydrant bury - M.J. Inlets.
7	Break-off check valve, Clow 400A, with 1/16" witness hole, epoxy lined.
8	1/8" full face cloth inserted rubber flange gasket.
9	Solid bolt, hex head 5/8" X 3" and nut, electrodeposited coating of zinc.
10	Wet barrel fire hydrant with swivel valve assemblies (see Section 4-09).
11	3' X 3' X 4" concrete pad, class 520-C-2500 (see Note 2 on Sheet 2).
12	2-way reflecting blue pavement marker. See Section 4-09.04 of these Specifications for approved markers (see Note 7 on Sheet 2).

REVISED	CITY OF NORCO PUBLIC WORKS DEPARTMENT - WATER UTILITY	DRAWN SJN DATE 12-6-16
DATE	STANDARD FIRE HYDRANT INSTALLATION	STD. NO. 430
	APPROVED DIRECTOR OF PUBLIC WORKS DATE 12/6/16	1 of 2

Notes:

1. See Section 5–03.04 of these Specifications for polyethylene protective wrapping requirements.

2. Top of concrete pad must match the top of curb and top of sidewalk.

3. See Section 4–09 of these Specifications for acceptable ductile iron fire hydrant manufacturers and models.

4. See Section 5–10 of these Specifications for hydrant painting requirements.

5. Hydrant cast iron caps and valve stems shall have 1–1/8" pentagon operation nuts.

6. Fire hydrant location:
   - A. Hydrant 30" behind face of curb (as shown) when:
     - 1) No sidewalk exists.
     - 2) Curb and sidewalk are not continuous.
     - 3) Curb and sidewalk are contiguous and sidewalk exceeds 6 feet.
   - B. Hydrant 18" behind sidewalk when curb and sidewalk are contiguous and sidewalk does not exceed 6 feet.
   - C. Hydrant a minimum 7 feet Clear from BCR, ECR or top of "X" of driveways.
   - D. Contractor to verify with Engineer the exact fire hydrant location prior to construction.

7. Two–way reflecting blue pavement marker required on hydrant stationing.
   - A. Two–way streets or roads:
     Place markers 6" from edge of painted centerline on the side nearest the fire hydrant. If the street has no centerline, place the marker 6" from the approximate center of the roadway on the side nearest the hydrant.
   - B. Streets with left turn lane at intersection:
     Place markers 6" from edge of painted white channelizing line on the side nearest the hydrant.
   - C. Streets with continuous two–way left turn lane:
     Place markers 6" from the edge of the painted yellow barrier line on the side nearest the fire hydrant.

8. Fire hydrants installed in easements, road and streets without curbs or with rolled curbs shall be protected by guard posts per Standard Drawing 431.

9. Contractor shall use additional restrained bends as necessary to avoid existing or proposed utilities.

REVISED	CITY OF NORCO PUBLIC WORKS DEPARTMENT – WATER UTILITY	DRAWN SJN DATE 12–6–16
DATE	STANDARD FIRE HYDRANT INSTALLATION	STD. NO. 430
	APPROVED _____ DIRECTOR OF PUBLIC WORKS DATE 12/6/16	2 of 2

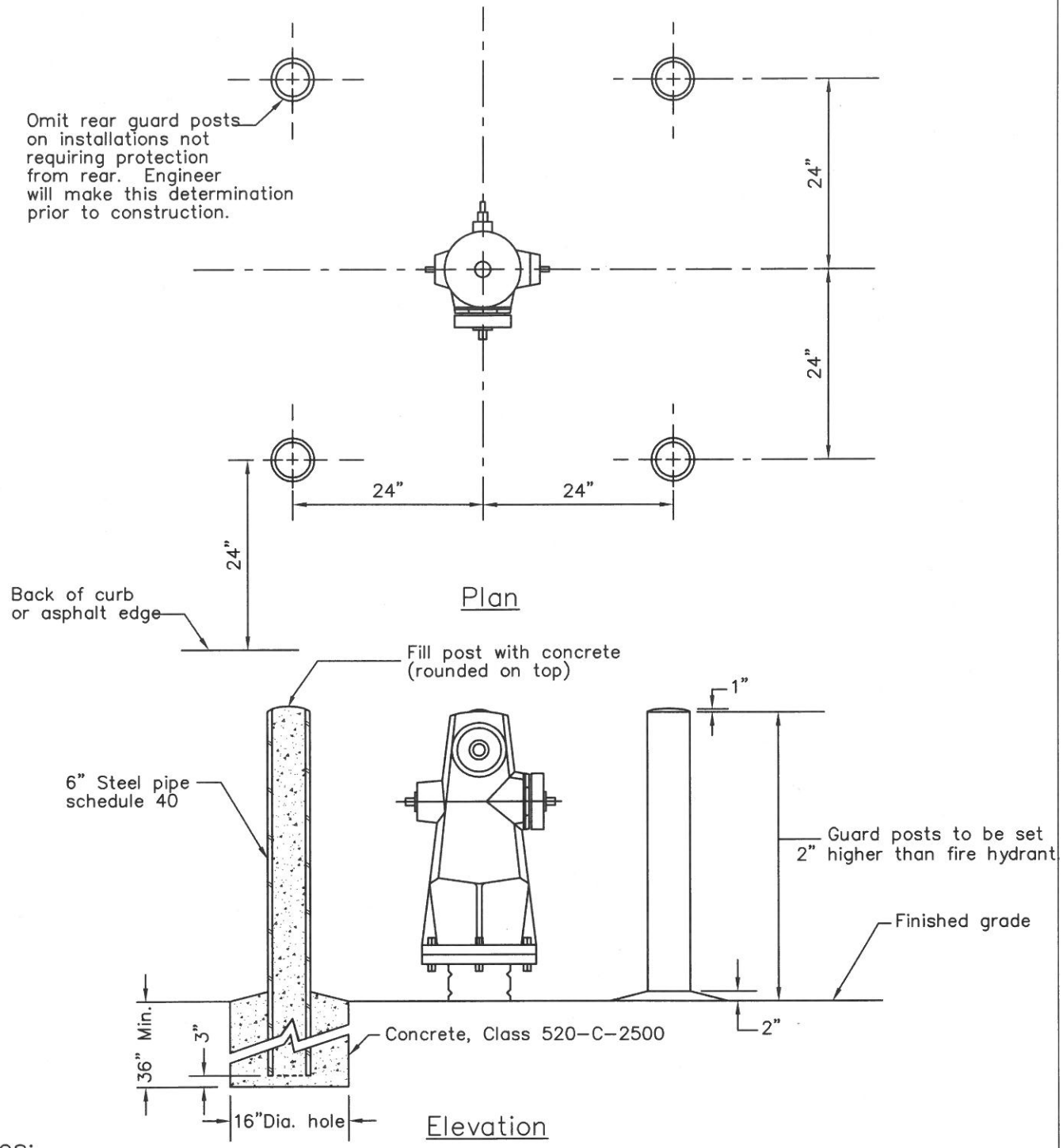

Notes:

1. See Section 5-10 of these Specifications for painting requirements.
2. Post shall be non-modified type.
3. Thread shall be buried.
4. Guard Post sleeves (see Section 4-09.03)

REVISED	CITY OF NORCO PUBLIC WORKS DEPARTMENT – WATER UTILITY	DRAWN SJN DATE 12-6-16
DATE	FIRE HYDRANT GUARD POST	STD. NO. 431
	APPROVED _____ DIRECTOR OF PUBLIC WORKS DATE 12/6/16	

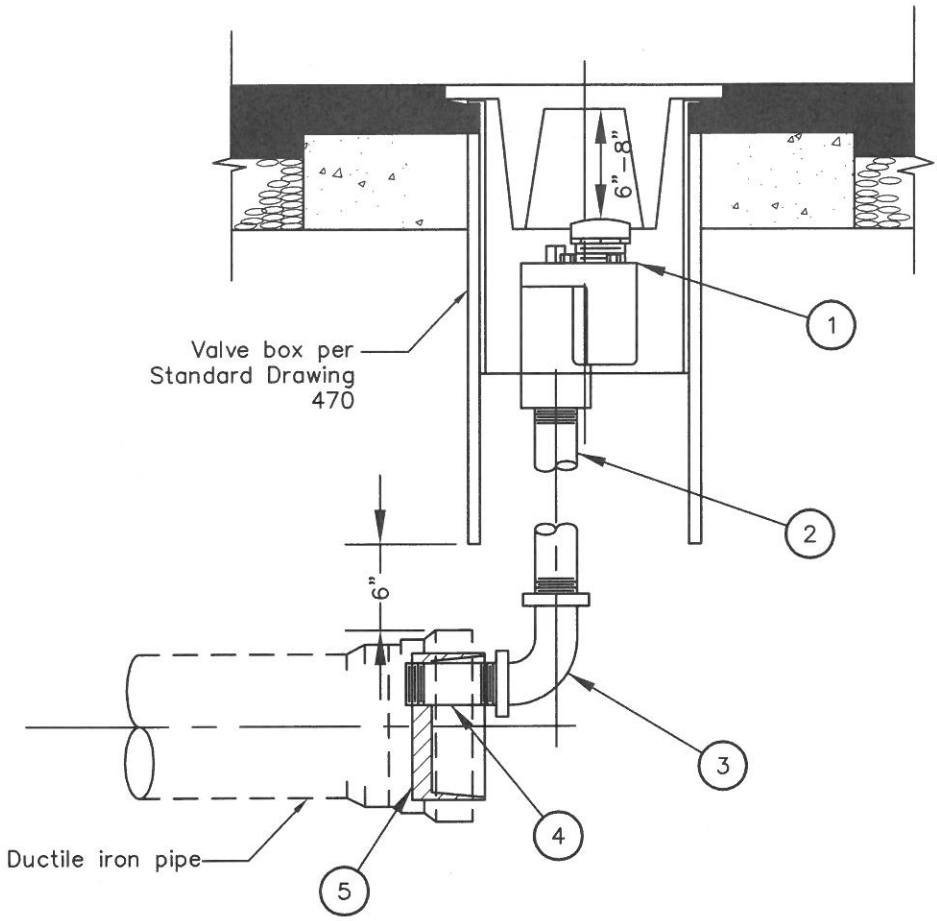

List of Materials

Item	Description
1	2" blow-off assembly, (See Section 4-08.5)
2	2" brass pipe, IPT, length varies.
3	2" - 90 degree brass elbow, F- IPT.
4	2" x 6"L brass nipple, IPT.
5	Restrained plug; pipe size x 2" D.I.

REVISED	CITY OF NORCO PUBLIC WORKS DEPARTMENT - WATER UTILITY	DRAWN SJN DATE 12-6-16
DATE	2" BLOW-OFF ASSEMBLY	STD. NO. 440
	APPROVED DIRECTOR OF PUBLIC WORKS DATE 12/6/16	

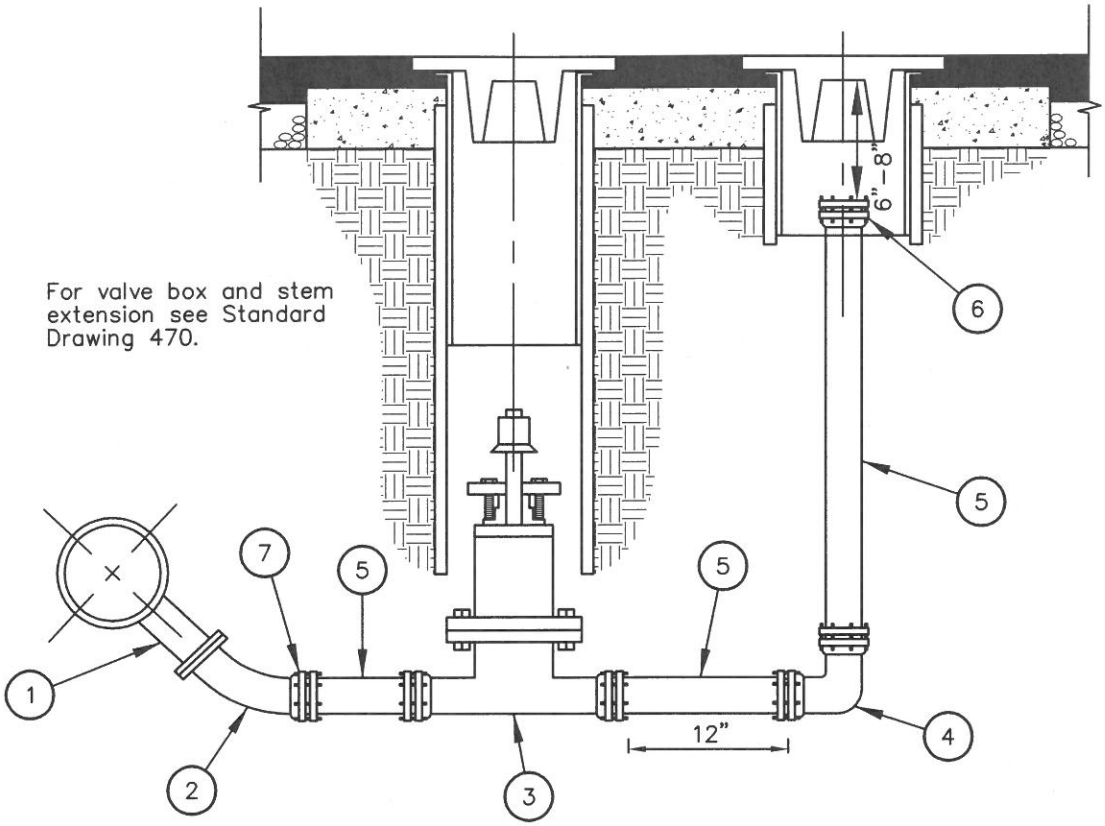

List of Materials

Item	Description
1	_" x _" x 4" D.I. tee, Flg.
2	4" – 45 Degree D.I. elbow, Flg. x M.J.
3	4" resilient–seat gate valve, M.J. See Section 4–08 of these Specifications for approved gate valves and other requirements.
4	4" – 90 Degree D.I. elbow, M.J.
5	4" D.I.P. PE x PE spool, cut to length
6	4" D.I. cap, M.J.
7	Restraint device (see Section 4–04).

REVISED	CITY OF NORCO PUBLIC WORKS DEPARTMENT – WATER UTILITY	DRAWN SJN DATE 12–6–16
DATE	4" SAND BLOW–OFF ASSEMBLY	STD. NO. 441
	APPROVED _____ DIRECTOR OF PUBLIC WORKS DATE 12/6/16	

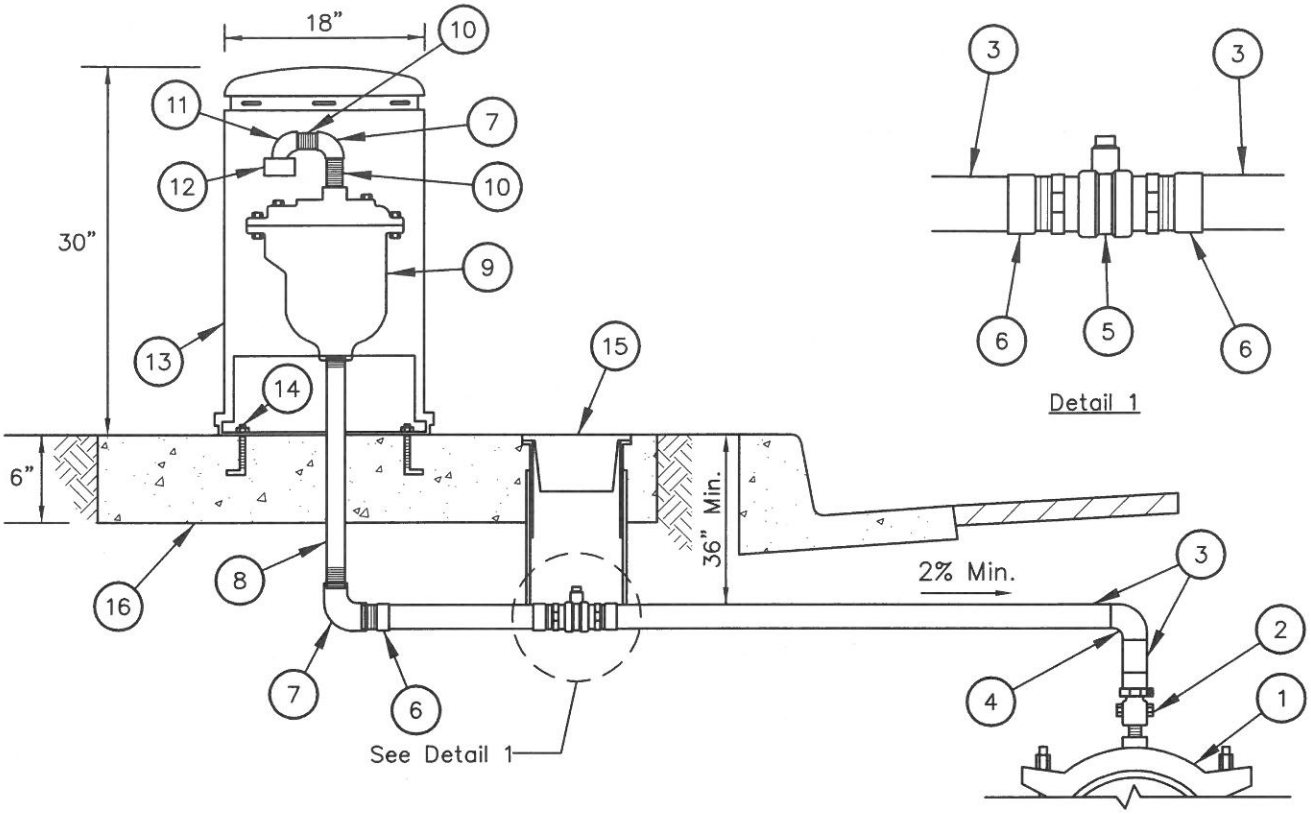

List of Materials

Item	Description
1	Double strap bronze saddle, see Standard Drawing 410 (1") or 412 (2").
2	Corporation stop, see Standard Drawing 410 (1") or 412 (2").
3	1" or 2" copper tubing, type K, rigid.
4	1" or 2" 90° copper sweat elbow.
5	Bronze ball valve, F–IPT X F–IPT, per Standard Drawing 410 (1") or 412 (2").
6	1" or 2" copper adapter, M–IPT X sweat.
7	1" or 2" brass 90° elbow, F–IPT.
8	1" or 2" rigid brass pipe, M–IPT.
9	1" or 2" combination air release valve (see Section 4–08.05).
10	1" or 2" brass nipple (order to fit).
11	1" or 2" brass street elbow.
12	Air vent screen/strainer, Christy's model #VC1 (1") OR #VC2 (2") or City approved equal.
13	Two–piece polyethylene enclosure (sandstone cover), by Pipeline Products, model #VCAS–1830 or City approved equal.
14	1/2" X 5"L anchor bolt with stainless washers, electrodeposited coating of zinc. 3 each.
15	Valve box and riser per Standard Drawing 470.
16	Concrete pad, Class 520–C–2500), (see Note 3 on Sheet 2).

REVISED

DATE

CITY OF NORCO

PUBLIC WORKS DEPARTMENT – WATER UTILITY

1" AND 2" COMBINATION AIR RELEASE VALVE ASSEMBLY

APPROVED DIRECTOR OF PUBLIC WORKS **DATE** 12/6/16

DRAWN SJN

DATE 12–6–16

STD. NO.

442

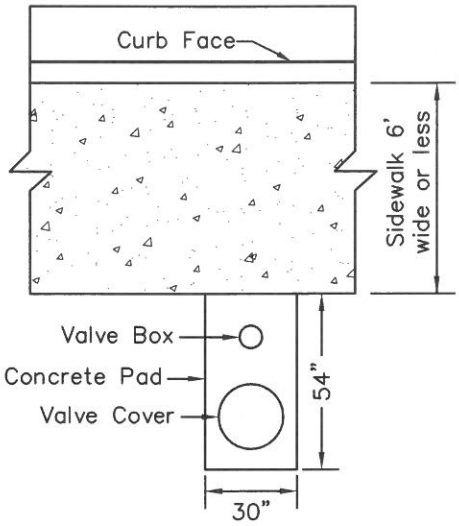

Case 1

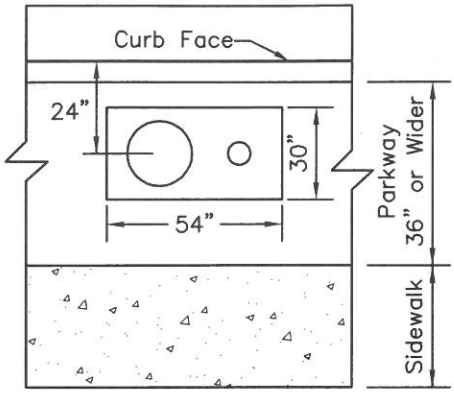

Case 2

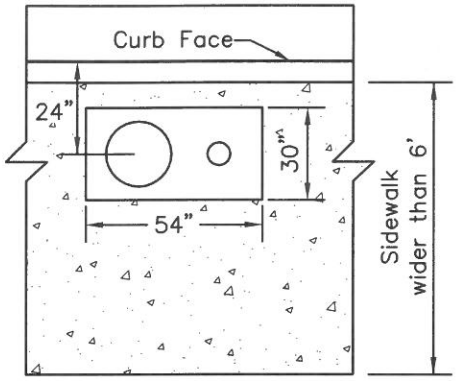

Case 3

Note:

Use case 2 if no sidewalk exists.

Notes:

1. Assemblies installed in easements, roads and streets without curbs or with rolled curbs shall be protected with guard posts per Standard Drawing 431.
2. Contractor is to verify with Engineer the exact assembly location prior to construction.
3. Top of concrete pad must match the top of curb and top of sidewalk.
4. Use 95% silver solder only for all sweat joints.
5. Assembly shall be located a minimum of 7 feet from BCR, ECR or driveway approaches.
6. All internal and external ferrous metal surfaces shall be epoxy coated per Section 4–08.05.

REVISED	CITY OF NORCO PUBLIC WORKS DEPARTMENT – WATER UTILITY	DRAWN SJN DATE 12–6–16
DATE	1" AND 2" COMBINATION AIR RELEASE VALVE ASSEMBLY	STD. NO. 442
	APPROVED _____ DIRECTOR OF PUBLIC WORKS DATE 12/6/16	2 of 2

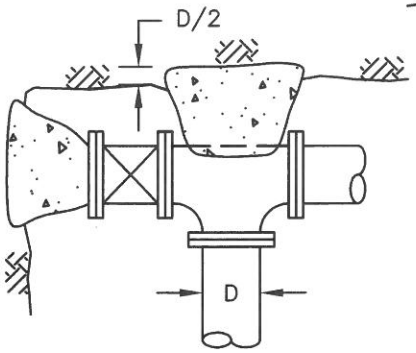

TEE

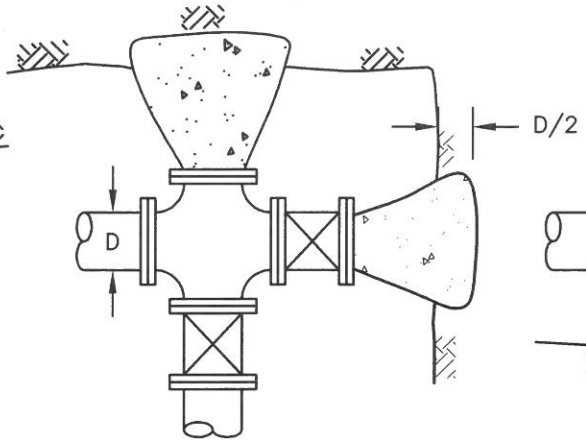

CROSS

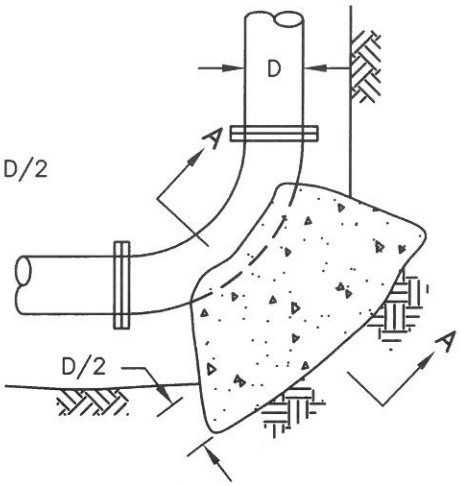

BEND

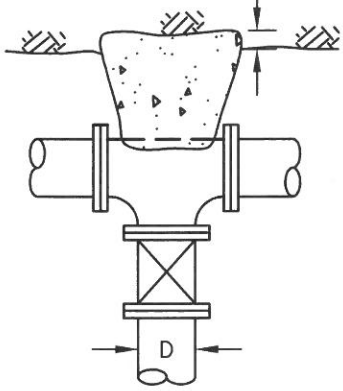

TEE

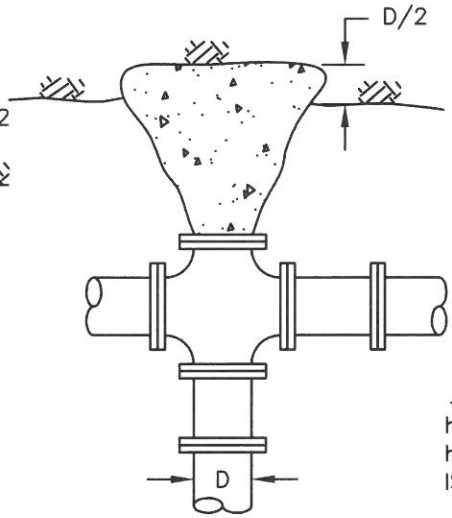

CROSS

NOTE:
$h \leq H/2$ OR
$h \geq D$ WHICHEVER
IS GREATER.

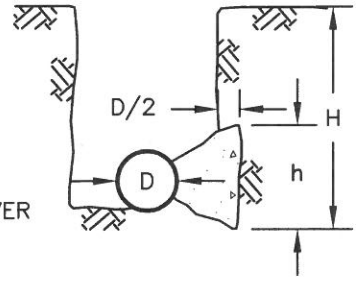

SECTION A–A

NOTES:

1. Concrete shall be 420–C–2000
2. Thrust Blocks sized for test pressure at 200 psi with a soil bearing pressure value of 1500 psf.
3. Thrust blocking shall be placed so the pipe and fitting joints will be accessible for repair.
4. Thrust Blocks shall be poured against undisturbed soil.
5. All water mains shall be ductile iron pipe (Class 350).

BEARING AREA OF THRUST BLOCK (SF)					
PIPE SIZE	TEES/ ENDS	90°	45°	22 ½°	11 ¼°
4"	2.5	3.5	2.0	N.A.	N.A.
6"	5.0	7.0	4.0	2.0	N.A.
8"	8.5	12.0	6.5	3.5	N.A.
10"	13.0	18.5	10.0	5.0	2.5
12"	18.5	25.5	14.0	7.0	3.5
14"	24.5	35.0	19.0	10.0	5.0
16"	32.0	45.0	24.0	12.5	6.0
18"	40.0	56.0	30.5	15.5	8.0
20"	49.0	69.0	37.5	19.0	10.0
24"	70.0	98.5	53.5	27.5	13.5

REVISED

DATE _____

CITY OF NORCO

PUBLIC WORKS DEPARTMENT – WATER UTILITY

DRAWN SJN

DATE 12–6–16

THRUST BLOCK

STD. NO. 445

APPROVED _____ **DATE** 12/6/16

DIRECTOR OF PUBLIC WORKS

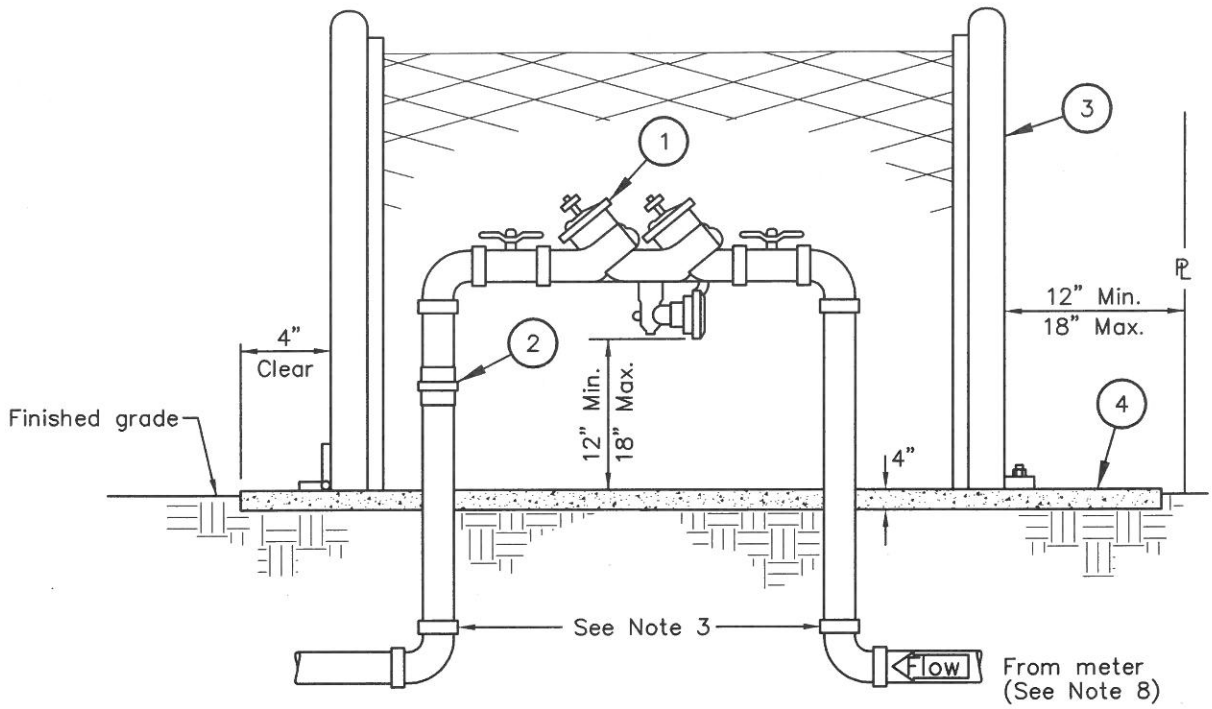

List of Materials

Item	Description
1	Reduced pressure backflow prevention assembly, U.S.C. approved type.
2	Brass union required if threaded fittings (elbows) are used.
3	Backflow prevention assembly enclosure per manufacturer's recommendations (see Notes 1 and 2). Must be hinged, lockable, rounded tubular shape.
4	Concrete pad, Class 520–C–2500, must be constructed to ensure 4" clearance around the backflow enclosure.

Notes:

1. See Section 3 of these Specifications for approved backflow assemblies, backflow enclosures, testing requirements, placement of backflow assemblies and other requirements.
2. Proposed location of the backflow device, protective enclosure and all parts must be approved by the Engineer prior to installation. Failure to comply may result in project delays to correct all unaccepted/unapproved work.
3. All fittings and pipe shall be brass or copper with either IPT or soldered connections, respectively.
4. A wye strainer or hose bibb is not allowed to be installed on backflow assembly piping.
5. A pressure reducer, if required, is only permitted at the building and not on the backflow assembly.
6. There shall be no connections between the meter and the backflow assembly.
7. Final placement of the backflow prevention enclosure must be at least 12" behind the public right–of–way.
8. If a new meter is installed, pipe shall be copper from meter to backflow. If there is existing piping to the meter, it may remain per plumbing code.

REVISED	CITY OF NORCO PUBLIC WORKS DEPARTMENT – WATER UTILITY	DRAWN SJN DATE 12–6–16
DATE	3/4" THROUGH 2" REDUCED PRESSURE BACKFLOW PREVENTION ASSEMBLY	STD. NO. 450
	APPROVED DIRECTOR OF PUBLIC WORKS DATE 12/6/16	

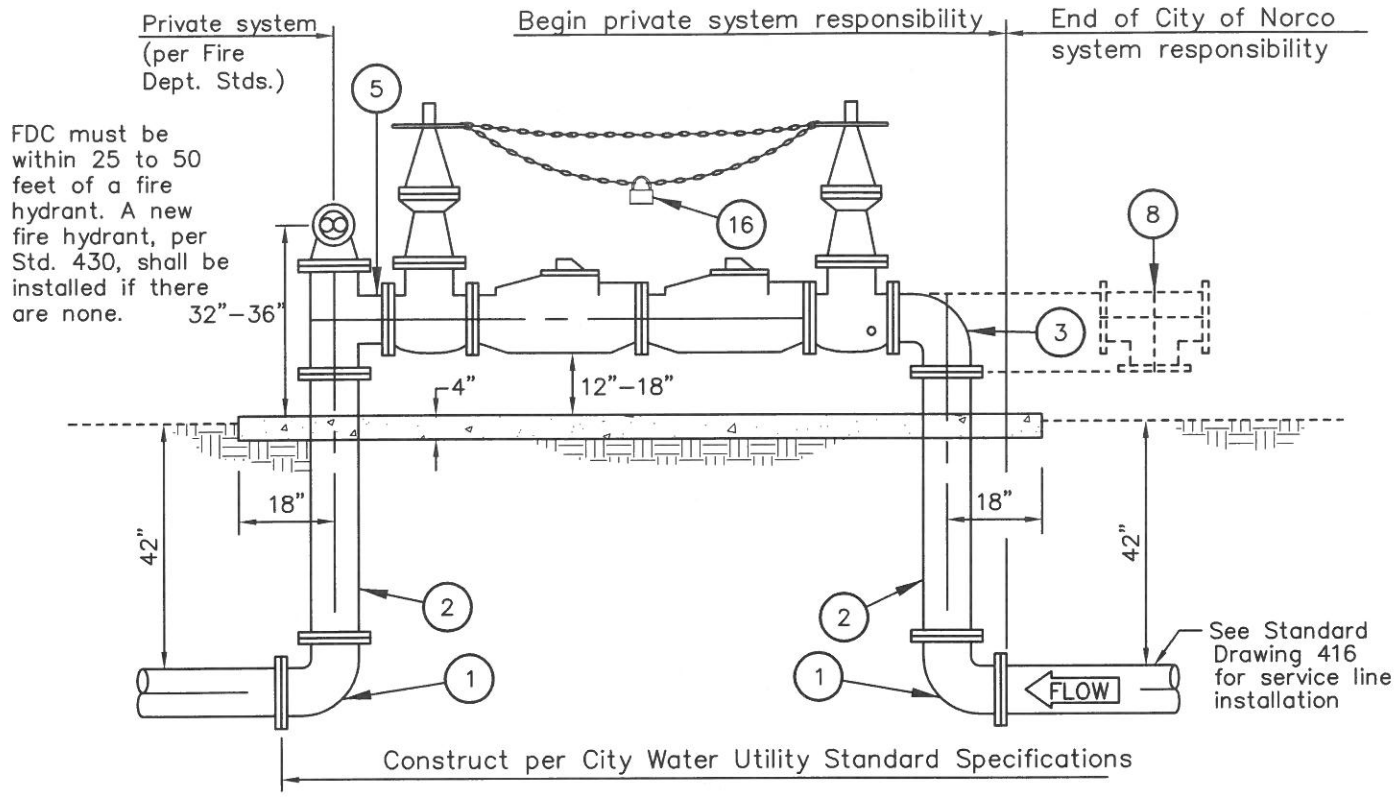

Elevation

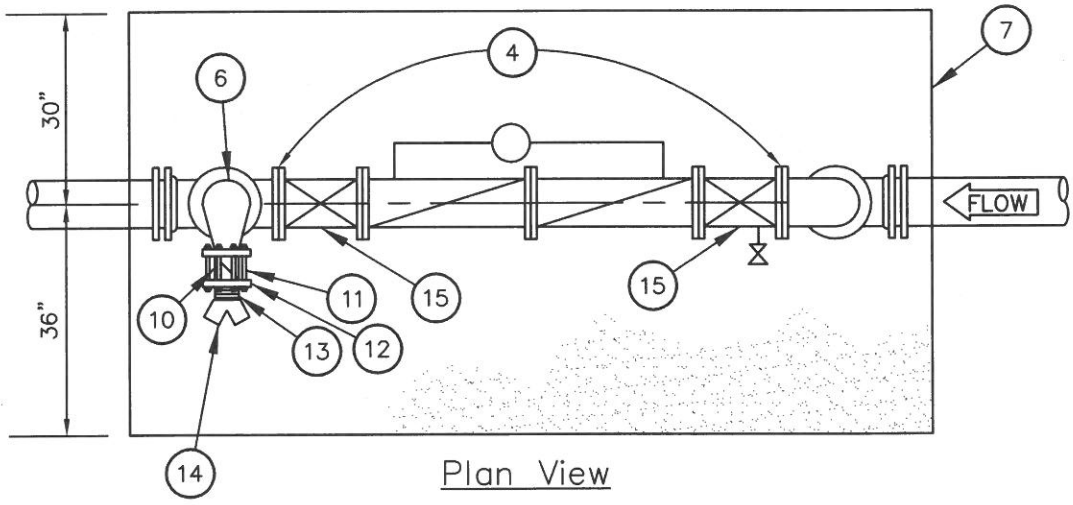

Plan View

REVISED	CITY OF NORCO PUBLIC WORKS DEPARTMENT – WATER UTILITY	DRAWN SJN DATE 12–6–16
DATE	FIRELINE DOUBLE CHECK DETECTOR ASSEMBLY	STD. NO. 451
	APPROVED _____ DIRECTOR OF PUBLIC WORKS DATE 12/6/16	1 of 2

List of Materials

Item	Description
1	90° D.I. elbow, FLG.
2	D.I.P spool, class 53, FLG. (order to size).
3	90° compact D.I. elbow, FLG.
4	Double detector check assembly.
5	Compact D.I Tee, FLG.
6	Pipe size X 4" – 90° D.I. required elbow, FLG. (see Note 3 hereon).
7	Concrete pad, class 520–C–2500
8	Insert compact D.I. tee for combination fire line and domestic service.
9	1/8" full face cloth inserted rubber flange gasket.
The following items must have pre–approval and final inspection by Fire Marshal.	
10	4" UL/FM wafer rubber–seated check valve.
11	8–5/8" X 7" L threaded–studs with 16 nuts, plain.
12	4" X 9" C.I threaded companion flange.
13	4" X 4"L galvanized nipple, I.P.T.
14	4" X (2) 2–1/2" Y bronze–straight pattern fire dept. connection (FDC) with plastic caps.
15	Tamper switch.(Per current NFPA 72 California Fire Code)
16	Owner's chain and breakaway padlock(s).

Notes:

1. See Section 3 of these Specifications for approved manufacturers of double detector check assemblies and required pressure principle detector assemblies by–pass meters, testing requirements, locations of assemblies and other requirements.

   The detector (by–pass) meter shall be ⅝" or ¾" normal size with bronze main case and bottom plate and shall have a straight read magnetic driven register capable of detecting consumptive use in cubic foot increments.

2. See Section 5–10 of these Specifications for fire line assembly painting requirements.

3. All bolts and nuts except item 11 on sheet 1 are to be zinc plated (brass is not acceptable).

4. Contractor shall submit to Engineer for approval the proposed location of fire line assembly prior to construction. Assembly shall be visible from street and within 50 feet of an area accessible by fire department vehicles.

5. Fire line assembly installed in easements road and streets without curbs or with rolled curbs shall be protected by guard posts per Standard Drawing 431. The number and specific location of such posts will be determined by the Engineer if not shown on the plans.

6. See Section 5–03.04 of these Specifications for polyethylene protective wrapping requirements.

7. New or updated signage may be required by Fire Marshal.
8. The location and required equipment for FDC and tamper switches shall be determined by the Fire Marshal.

REVISED	CITY OF NORCO PUBLIC WORKS DEPARTMENT – WATER UTILITY	DRAWN SJN DATE 12–6–16
DATE	FIRELINE DOUBLE CHECK DETECTOR ASSEMBLY	STD. NO. 451
	APPROVED _____ DIRECTOR OF PUBLIC WORKS DATE 12/6/16	2 of 2

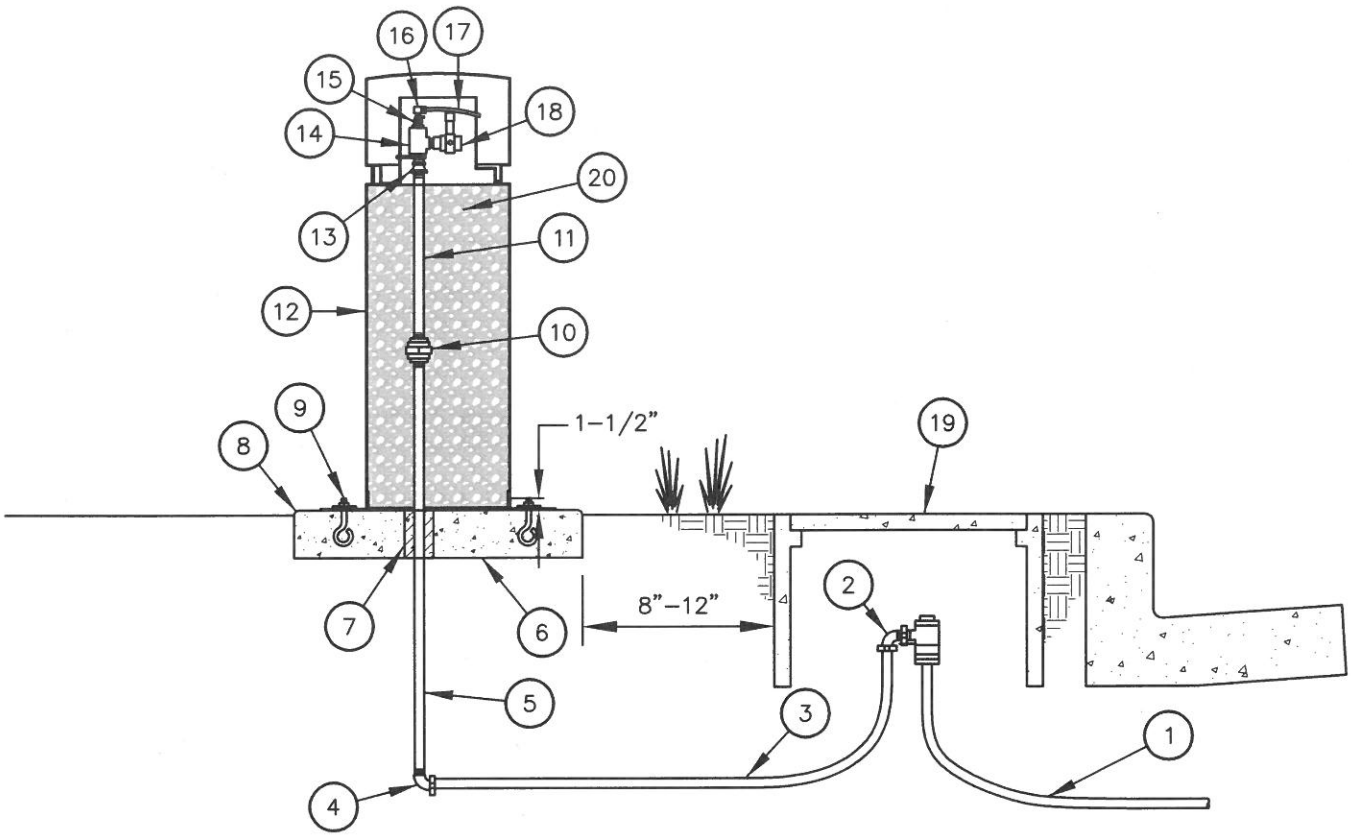

List of Materials

Item	Description
1	Service saddle, 1" corporation stop, 1" copper tubing, 1" angle meter valve, 1 1/4" x 1" meter adapter, and meter box per standard drawing 410.
2	1" – 90 Degree elbow, compression x M–IPT, Jones J–2619SG, McDonald 4779MT or Mueller H–15531
3	1" Copper tubing per standard drawing 601.
4	1" – 90 Degree elbow, compression x F–IPT, McDonald 4779T or Mueller H–15533.
5	1" Rigid brass pipe, M–IPT
6	24" x 24" x 4" P.C.C. pad
7	1" Thick construction felt or 10 mil PE wrap around pipe.
8	Finish with 1/2" radius all around.
9	3/8" x 5" SS eye bolt, SS lock washer, 3/8" SS nut (typical)
10	1" Mueller 110 conductive compression connection H–15451, F.I.P. x F.I.P.
11	1" x 12" brass pipe M.I.P. x M.I.P.
12	12" x 36" Armorcast water samplng station P6002010 (sandstone) or City approved equal.
13	1" x 3/4" brass reducer F.I.P. x F.I.P., 3/4" x 1–1/2" brass nipple
14	3/4" brass tee, 3/4" x 1/4" M.I.P. x F.I.P. brass bushing
15	(2) 1/4" brass close nipple, 1/4" F.I.P. x F.I.P. brass ball valve with handle.
16	1/4" x 1/4" F.I.P. x Compression 90 deg brass bend.
17	1/4" copper tube, 4–1/2" length
18	3/4" brass close nipple, 3/4" F.I.P. x F.I.P. brass ball valve with handle.
19	1" Meter box assembly (see Section 4–10.06).
20	3/8" Pea Gravel

REVISED

DATE _____

CITY OF NORCO

PUBLIC WORKS DEPARTMENT – WATER UTILITY

DRAWN SJN

DATE 12–6–16

WATER QUALITY SAMPLING STATION

STD. NO. 460

APPROVED _____ **DATE** 12/6/16

DIRECTOR OF PUBLIC WORKS

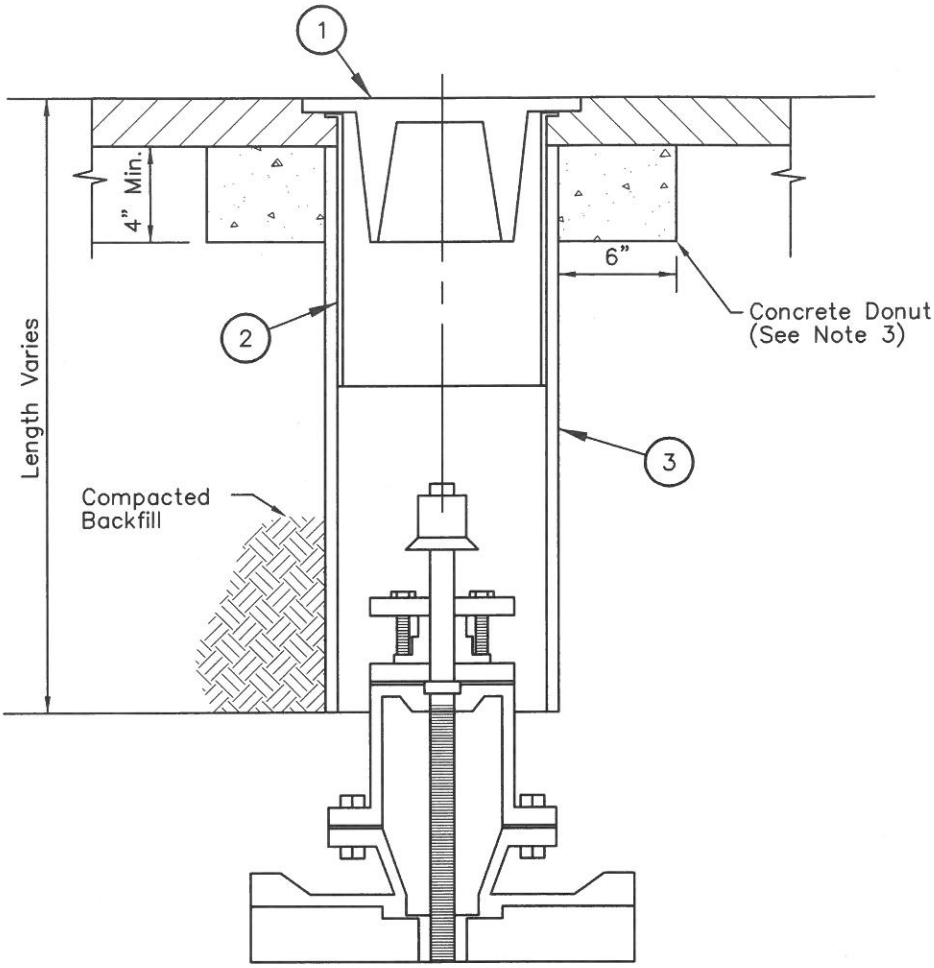

List of Materials

Item	Description
1	8" Cast iron 'valve box' cover (see Note 1) by Eisel Enterprises, Inc. Model #W106C.
2	8" O.D. X 20 GA. galvanized valve can (18" long min.) by RK Industries.
3	Riser Pipe – 8" PVC (C–900) DR 18 pipe.

Notes:

1. Cast iron cover shall have standard cover marking "WATER".
2. Backfill and resurface per Section 2 of these Specifications and as directed by Engineer.
3. Concrete donut shall be Class 560–C–3250.
4. Valve stem extensions required if depth to valve nut exceeds 6 feet, per Standard Drawing 471. The City shall approve all extensions.
5. Contractor shall raise slip can to grade when paving street.

REVISED	CITY OF NORCO PUBLIC WORKS DEPARTMENT – WATER UTILITY	DRAWN SJN DATE 12–6–16
DATE	STANDARD VALVE BOX ASSEMBLY	STD. NO. 470
	APPROVED _____ DIRECTOR OF PUBLIC WORKS DATE 12/6/16	

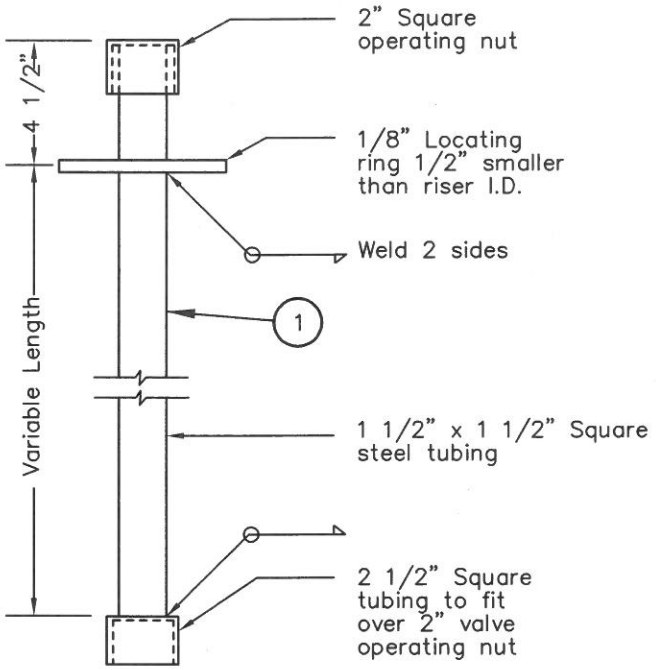

List of Materials

Item	Description
1	Steel valve stem extension, Pipeline Products part number SX-906 or approved equal.

Notes:

1. Provide valve stem extension when depth from finished grade to operating nut exceeds 6 feet.
2. Terminate extension 24" to 36" from finished grade.
3. No valve stem extension shall be less than 2 feet in length.
4. Fabricate extension to field measurement.
5. Provide additional locating ring when distance to bottom socket exceeds 5 feet.
6. The valve stem extension shall be of solid design, pinned couplers are unacceptable.
7. Stem shall not be pinned or attached by any other means to the valve nut.
8. See Section 5-10 of these Specifications for painting requirements.

REVISED	CITY OF NORCO PUBLIC WORKS DEPARTMENT – WATER UTILITY	DRAWN SJN DATE 12-6-16
DATE	STEEL VALVE STEM EXTENSION	STD. NO. 471
	APPROVED _____ DIRECTOR OF PUBLIC WORKS DATE 12/6/16	