CITY OF NORCO

STANDARD DRAWINGS

JANUARY 2005

JOSEPH S. SCHENK
CITY ENGINEER

REVISIONS

STD. 155	10/2005
STD. 700	10/2007
STD. 700.	02/2008
STD. 405/410	07/2011
STD. 420	05/2014
STD. 445	09/2014
STD. 456 & 465	12/2014

INDEX TO STANDARD DRAWINGS

00 - General Notes

Grading General Notes
Sanitary Sewer General Notes
Storm Drain General Notes
Street General Notes
Water General Notes

50 - Drafting Standards

50A - Drafting Standards and Topo Symbols
50B - Drafting Standards and Topo Symbols

100 - Street Standards

100 - Typical Street Section W = 60'
110 - Typical Street Section, W = 88'
115 - Typical Street Section, W = 88' with Equestrian Trail
120A - Typical Street Section, W = 110'
120B - Typical Street Section, W = 110' with Raised Median
125 - typical Street Section, W = 64' with Equestrian Trail
140A - Cul-de-Sac (Symmetrical)
140B - Cul-de-Sac (Off-set)
140C - Cul-de-Sac with Equestrian Trail on One Side
145A - Intersection Knuckle
155 - Street Pavement Repair

200 - Curbs, Gutters, Driveway Standards

200 - Standard Curb Details
205 - Standard Rolled Curb
215 - Curb transition
225 - Cross Gutter and Spandrel
235 - Ramp for the Physically Disabled
240 - Residential Driveway Approach
245 - Residential Driveway Approach with Equestrian Trail
250 - Commercial and Industrial Driveway Approach
255 - Commercial Driveay Approach (Alternative)

300 - Drainage Standards

300A - Parkway Drain
300B - Parkway Drain
301 - Curb Outlet for Residential Rolled Curb

INDEX TO STANDARD DRAWINGS

400 - Water Standards

400A - Separation of Sewer and Water
400B - Separation of Sewer and Water, Concrete Encasement
405 - Water Service Connection
406 - Water Service Abandonment
410 - 2" Water Service Connection
415 - Standard Water Service, 3" and Larger
420 - Detector Check Double Check Valve
425 - Steel Pipe Joints
430A - Installation of Landscaping Backflow Prevention Assembly
430B - Installation of Landscaping Backflow Prevention Assembly
435 - Universal Air Valve Assembly
440A - Transmission Main Blow off Assembly
440B - Blow off (for Future Extension)
440C - 2" Blow Off Assembly
445 - Fire Hydrant Assembly
446 - Typical Hydrant Marker Location
450 - Gate Valve Extension
451 - Butterfly Valve Extension
455 - Gate Valve and Box
456 - Butterfly Valve and Box
460 - Thrust Blocks
465 - Weld Collar
470 - Sampling Station

500 - Sewer Standards

500A - Sewer Saddle and Lateral
500B - Sewer Saddle Details
505 - Sewer lateral Abandonment
510 - Sewer Terminal Clean-Out
515 - Precast Concrete Manhole for Lines 15" in Dia. and Smaller
520 - Sewer Manhole Drop Inlet
535 - Manhole Cover Adjustment
540 - Sewer Manhole Frame and Cover

600 - Miscellaneous Standards

620 - Parking Lot Design
630 - Refuse Bin Enclosure
635 - Steps for Manholes

INDEX TO STANDARD DRAWINGS

700 - Trail Standards

700 - Equestrian Trail Standard
705 - Wood Trail Fencing Detail
706 - PVC Trail Fencing Detail
710 - Equestrian Trail at Corner
720 - Horse Trail Sign

800 - Sign and Marking Standards

800A - Street Name Sign
800B - Typicl Street Name Sign Locations
815 - Stop Bar and Legend Placement
820 - Barricade
830 - Traffic Indexes for Design Use
840 - Crosswalk Placement and Signal Pole Location

900 - Survey Standards

900 - Centerline Tie Requirements
905A - Street Tie Locations
905B - Street Tie Locations
905C - Street Tie Locations
915 - Standard Subdivision Monumentation
916 - Subdivision Monumentation Notes

00
GENERAL
NOTES

CITY of NORCO STANDARD DRAWING

General Notes: (Grading)

1. ALL WORK SHALL BE DONE IN ACCORDANCE WITH THE CITY OF NORCO ORDINANCE, THE CITY ENGINEER AND ANY SPECIAL REQUIREMENTS OF THE PERMIT.

2. NO GRADING SHALL BE STARTED WITHOUT FIRST NOTIFYING THE CITY ENGINEER.

3. A PRE-GRADING MEETING AT THE SITE IS REQUIRED BEFORE START OF GRADING WITH THE FOLLOWING PEOPLE PRESENT: OWNER, GRADING CONTRACTOR, DESIGN CIVIL ENGINEER, SOILS ENGINEER, GEOLOGIST.

4. FILLS SHALL BE COMPACTED THROUGHOUT TO 90% DENSITY AS DETERMINED BY U.B.C. STANDARD NO. 70-1-10, AND CERTIFIED BY THE SOILS ENGINEER.

5. AREAS TO RECEIVE FILL SHALL BE PROPERLY PREPARED AND APPROVED BY THE SOILS ENGINEER PRIOR TO PLACING OF FILL.

6. FILL AREAS SHALL BE CLEANED OF ALL VEGETATION AND DEBRIS, SCARIFIED TO A DEPTH OF 12 INCHES AND INSPECTED BY THE SOIL TESTING AGENCY PRIOR TO THE PLACING OF FILL.

7. THE FACE OF ALL CUT AND FILL SLOPES SHALL BE PLANTED AND MAINTAINED WITH A GROUND COVER APPROVED BY THE PLANNING DIRECTOR. AN APPROVED IRRIGATION SYSTEM OR WATERING FACILITIES MAY BE REQUIRED BY THE CITY ENGINEER OR PLANNING DIRECTOR PRIOR TO ROUGH GRADE APPROVAL.

8. ALL TRENCH BACKFILLS SHALL BE TESTED AND CERTIFIED BY THE SITE SOILS ENGINEER PER THE GRADING CODE. THE SOIL CERTIFICATION SHALL INCLUDE THE STABILITY OF THE BACKFILL AND THAT THE COMPACTION IS 90% OF THE OPTIMUM DENSITY USING THE AASHTO TEST T 180-57 MODIFIED TO USE 3 LAYERS IN LIEU OF 5 LAYERS.

9. THE FINAL COMPACTION REPORT AND CERTIFICATION FROM THE SOILS ENGINEER SHALL CONTAIN THE TYPE OF FIELD TESTING PERFORMED. EACH TEST SHALL BE IDENTIFIED WITH THE METHOD OF OBTAINING THE IN-PLACE DENSITY, WHETHER SAND CONE OR DRIVE RING AND SHALL BE SO NOTED FOR EACH TEST. SUFFICIENT MAXIMUM DENSITY DETERMINATIONS SHALL BE PERFORMED TO VERIFY THE ACCURACY OF THE MAXIMUM DENSITY CURVES USED BY THE FIELD TECHNICIAN.

10. THE DESIGN CIVIL ENGINEER SHALL EXERCISE SUFFICIENT SUPERVISORY CONTROL DURING GRADING AND CONSTRUCTION TO INSURE COMPLIANCE WITH THE PLANS, SPECIFICATIONS, AND CODE WITHIN HIS PURVIEW.

11. STRICT ADHERENCE TO DUST CONTROL REQUIREMENTS SHALL BE ENFORCED AND ALL DUST SHALL BE CONTROLLED BY WATERING.

12. PRIOR TO TRENCHING FOR THE FOUNDATION, THE ROUGH GRADING SHALL BE APPROVED BY THE CITY ENGINEER AND THE ROUGH GRADE CERTIFICATION, ALONG WITH THE FINAL COMPACTION TESTING REPORT, SHALL BE SUBMITTED AND APPROVED BY THE CITY ENGINEER. FINISH GRADE CERTIFICATION SHALL BE SUBMITTED TO AND APPROVED BY THE CITY ENGINEER PRIOR TO CERTIFICATE OF OCCUPANCY.

REVISION	NO:	BY:	DATE:	NO:	BY:	DATE:

Drawn By: LJA Date: 03/19/04

APPROVED: Joseph Schenk 24039
CITY ENGINEER RCE

GENERAL NOTES (GRADING)

Std. Dwg. No. 010
Sheet 1 of 3

CITY of NORCO STANDARD DRAWING

13. STATE LAW (SB3019) REQUIRES THE CONTRACTOR TO CONTACT UNDERGROUND SERVICE ALERT (USA) AND OBTAIN AN IDENTIFICATION NUMBER PRIOR TO THE ISSUANCE OF THE CITY'S ENCROACHMENT PERMIT. THE CONTRACTOR SHALL NOTIFY USA TWO FULL WORKING DAYS (48 HOURS MINIMUM) IN ADVANCE OF ANY CONSTRUCTION ACTIVITIES.

14. ALL SURVEY MOMUMENTS SHALL BE PROTECTED AND PERPETUATED IN PLACE. ANY DISTURBED OR COVERED MONUMENTS SHALL BE RESET BY A REGISTERED CIVIL ENGINEER OR A LICENSED LAND SURVEYOR.

15. REPAIR OR REPLACE ALL EXISTING DAMAGED OR ALTERED PUBLIC IMPROVEMENTS AS REQUIRED BY THE ENGINEER IN THE FIELD.

16. ANY MATERIAL INCORPORATED AS PART OF THE COMPACTED FILL MUST BE APPROVED BY THE SOILS ENGINEER. INSPECTION AND CERTIFICATION OF FILL PLACEMENT SHALL BE PROVIDED BY THE SOILS ENGINEER DURING THE PROCESS OF GRADING. NO ROCK OR SIMILAR MATERIAL GREATER THAN EIGHT INCHES IN DIAMETER WILL BE PLACED IN THE FILL UNLESS RECOMMENDATIONS FOR SUCH PLACEMENT HAVE BEEN SUBMITTED BY THE SOILS ENGINEER IN ADVANCE AND APPROVED BY THE CITY ENGINEER.

17. IF ANY UNKNOWN SUB-SURFACE STRUCTURES ARE ENCOUNTERED DURING CONSTRUCTION, THEY SHALL BE IMMEDIATELY BROUGHT TO THE ATTENTION OF THE SOILS ENGINEER AND THE CITY ENGINEER PRIOR TO PROCEEDING WITH GRADING OPERATIONS.

18. IT SHALL BE THE CONTRACTOR'S RESPONSIBILITY TO VERIFY THE LOCATION OF ALL UTILITIES OR STRUCTURES ABOVE OR BELOW GROUND, SHOWN OR NOT SHOWN ON THESE PLANS. HE WILL BE HELD RESPONSIBLE FOR ALL DAMAGE TO ANY UTILITIES OR STRUCTURES CAUSED BY HIS OPERATION. THE ENGINEER OF RECORD MUST BE NOTIFIED OF ANY CONFLICTS AND CONSTRUCTION MUST BE TERMINATED AND STREETS RESTORED UNTIL CORRECTIVE MEASURES HAVE BEEN APPROVED BY THE CITY ENGINEER.

19. CUT SLOPES SHALL NOT EXCEED 1-1/2:1 AND FILL SLOPES SHALL NOT EXCEED 2:1 UNLESS OTHER SLOPE IS JUSTIFIED BY THE SOILS ENGINEER. FILL SLOPES SHALL HAVE NOT LESS THAN 90% RELATIVE COMPACTION AS DETERMINED BY ASTM D 1557-70 AND CERTIFIED BY THE SOILS ENGINEER. TOE OF SLOPES WILL BE LOCATED PER CHAPTER 70 OF THE UNIFORM BUILDING CODE, LATEST EDITION.

20. SEPARATE PERMITS SHALL BE REQUIRED FOR ANY IMPROVEMENT WORK IN THE PUBLIC RIGHT-OF-WAY.

21. ADJACENT STREETS ARE TO BE CLEANED DAILY OF ALL DIRT AND DEBRIS THAT IS THE RESULT OF THIS OPERATION.

22. ALL BACKFILL OF TRENCHES TO BE CERTIFIED BY A SOILS ENGINEER (90% MINIMUM COMPACTION) PER CITY STANDARDS AND SPECIFICATIONS. ALL EXCAVATIONS, CONSTRUCTION AND INSTALLATIONS IN THE PUBLIC RIGHT-OF-WAY REQUIRE INSPECTION BY CITY INSPECTOR. FAILURE TO HAVE INSPECTION MAY RESULT IN REOPENING OF THE EXCAVATION AND POSSIBLE RECONSTRUCTION.

REVISION	NO:	BY:	DATE:	NO:	BY:	DATE:

Drawn By: LJA Date: 03/19/04

APPROVED: Joseph Schenk 24039
CITY ENGINEER RCE

GENERAL NOTES (GRADING)

Std. Dwg. No. 010
Sheet 2 of 3

CITY of NORCO STANDARD DRAWING

23. EARTHWORK QUANTITIES FOR STREET AND SITE GRADING ARE ESTIMATED TO BE:

    CUT: _____ FILL: _____ IMPORT: _____

    THESE QUANTITIES ARE BASED ON THE ASSUMPTION THAT A , SUBSIDENCE WILL OCCUR OVER THE ENTIRE SITE.

24. THE UNDERSIGNED CIVIL ENGINEER CERTIFIES THAT THIS GRADING WORK WILL BE SUPERVISED IN ACCORDANCE WITH SECTION 7014 OF THE UNIFORM BUILDING CODE.

    SIGNATURE _____ R.C.E. NO. _____ DATE _____

25. AN AS-BUILT GRADING PLAN SHALL BE SUBMITTED BY THE ENGINEER ALONG WITH THE FINAL GRADE CERTIFICATION PRIOR TO ISSUANCE OF OCCUPANCY.

26. NO WATER SHALL BE TAKEN FROM CITY FIRE HYDRANTS WITHOUT AN AUTHORIZED HYDRANT METER.

27. APPROVED PROTECTIVE MEASURES AND TEMPORARY DRAINAGE PROVISIONS MUST BE USED TO PROTECT ADJOINING PROPERTIES DURING ANY GRADING OPERATIONS. THE CITY ENGINEER MAY REQUIRE AND SHALL APPROVE ANY TEMPORARY DRAINAGE MEASURES USED TO PROTECT ADJOINING PROPERTY DURING GRADING OPERATIONS, I.E., EROSION CONTROL, FROM OCTOBER 15 TO APRIL 15 AND SHALL BE ON FILE WITH THE CITY ENGINEER.

28. APPROVAL OF THESE PLANS BY THE CITY OR ITS AGENTS DOES NOT RELIEVE THE ENGINEER AND THE APPLICANT FROM THE RESPONSIBILITY FOR THE CORRECTION OF ERRORS OR OMISSIONS DISCOVERED DURING CONSTRUCTION. UPON REQUEST, THE APPROPRIATE PLAN REVISIONS SHALL BE PROMPTLY SUBMITTED TO THE CITY ENGINEER FOR REVIEW AND APPROVAL.

29. ALL GRADING OPERATIONS SHALL CEASE IF WIND VELOCITIES EXCEED 25 MPH. THE PROJECT SITE SHALL BE REGULARLY WATERED TO MITIGATE BLOWING DUST DURING THE DURATION OF HIGH WIND CONDITIONS.

REVISION	NO:	BY:	DATE:	NO:	BY:	DATE:

Drawn By: LJA Date: 03/19/04

APPROVED: Joseph Schenk 24039
CITY ENGINEER RCE

GENERAL NOTES (GRADING)

Std. Dwg. No. 010
Sheet 3 of 3

CITY of NORCO STANDARD DRAWING

General Notes: (Sewer)

1. ALL WORK SHALL BE DONE IN ACCORDANCE WITH CITY OF NORCO STANDARD DRAWINGS, STANDARD SPECIAL PROVISIONS, AND THE LATEST EDITION OF STANDARD SPECIFICATIONS FOR PUBLIC WORKS CONSTRUCTION, WITH SUPPLEMENTS. ANY VARIATION FROM OR EXCEPTION TO THE STANDARDS OR FOLLOWING GENERAL NOTES MUST BE APPROVED BY THE CITY ENGINEER.

2. ALL MAINLINE SEWER SHALL BE VCP BELL AND SPIGOT. RESIDENTIAL LATERALS SHALL BE 4" VCP BELL AND SPIGOT. COMMERCIAL LATERALS SHALL BE 6" MINIMUM VCP BELL AND SPIGOT.

3. THE CONTRACTOR SHALL NOTIFY THE CITY OF NORCO ENGINEERING DEPARTMENT AT 951-270-5680, AT LEAST 48 HOURS PRIOR TO THE START OF ANY PHASE OF CONSTRUCTION AND 24 HOURS PRIOR TO THE NEED OF INSPECTION.

4. MANHOLE COVERS SHALL BE LEFT AT LEAST 6" BELOW SUBGRADE AND BROUGHT TO FINAL GRADE UPON COMPLETION OF PAVING. FINAL MANHOLE FRAME AND COVER SHALL BE ADJUSTED TO GRADE PER CITY OF NORCO STANDARD DRAWING NO. 535.

5. FOUR-INCH (4") V.C.P. SEWER LATERAL CONNECTIONS SHALL BE LAID TO GRADE AS ESTABLISHED BY THE ENGINEER SO THAT THE 4" V.C.P. WILL HAVE A MINIMUM COVER OF FIVE (5') TO THE TOP OF PIPE AT PROPERTY LINE AND SHALL HAVE A MINIMUM GRADE OF 2%. ALL SEWER LATERALS SHALL BE LAID 90 DEGREES TO THE MAIN LINE.

6. FINAL TESTING FOR PIPELINE LEAKAGE SHALL BE MADE IN THE PRESENCE OF THE CITY INSPECTOR AFTER BACKFILL AND COMPACTION HAVE BEEN COMPLETED BY THE CONTRACTOR AND INSPECTED, APPROVED AND ACCEPTED BY THE CITY ENGINEER.

7. ALL SEWER LINES TO BE BALLED IN THE PRESENCE OF THE CITY INSPECTOR AFTER FINAL TESTING AND MANHOLE COVERS HAVE BEEN BROUGHT TO GRADE UPON COMPLETION OF PAVING. BALLING MUST BE COMPLETED TO THE SATISFACTION OF THE CITY ENGINEER PRIOR TO OCCUPANCY RELEASES BEING ISSUED.

8. ALL TRENCH BACKFILL SHALL BE COMPACTED TO A MINIMUM OF 90% RELATIVE DENSITY IN THE PIPE ZONE AND TO WITHIN 6" OF THE SUBGRADE. A MINIMUM OF 95% RELATIVE DENSITY SHALL BE REQUIRED IN THE TOP 12" BELOW THE PAVEMENT.

9. THE DEVELOPER'S ENGINEER SHALL FURNISH A COMPLETE SET OF "AS-BUILT" PLANS ON ORIGINAL MYLARS TO THE CITY ENGINEER AT THE COMPLETION OF THE SEWER WORK AND PRIOR TO PAVING OF STREETS, SHOWING LOCATION OF WYES AND END OF HOUSE LATERALS AT THE PROPERTY LINE.

10. SAND BEDDING SHALL BE S.E. MIN. 30, 4" UNDER THE PIPE, AND 12" OF COLORED SAND OVER THE TOP OF PIPE UNLESS OTHERWISE NOTED ON PLANS. COLOR TO BE APPROVED BY FIELD INSPECTOR PRIOR TO LAYING.

11. THE CURB AND GUTTER SHALL BE "ETCHED" SHOWING LATERAL LOCATIONS: "S" FOR SEWER; "G" FOR GAS; "E" FOR ELECTRICAL; AND "W" FOR WATER.

REVISION	NO:	BY:	DATE:	NO:	BY:	DATE:

12/15/04

APPROVED: Joseph B. Schenk 24039
CITY ENGINEER RCE

Drawn By: LJA Date: 03/19/04

GENERAL NOTES (SEWER)

Std. Dwg. No. 011
Sheet 1 of 2

CITY of NORCO STANDARD DRAWING

12. STATE LAW (SB3019) REQUIRES THE CONTRACTOR TO CONTACT UNDERGROUND SERVICE ALERT (USA) AND OBTAIN AN IDENTIFICATION NUMBER PRIOR TO THE ISSUANCE OF THE CITY'S ENCROACHMENT PERMIT. THE CONTRACTOR SHALL NOTIFY USA TWO FULL WORKING DAYS (48 HOURS MINIMUM) IN ADVANCE OF ANY CONSTRUCTION ACTIVITIES.

13. PRIOR TO CONSTRUCTION, THE CONTRACTOR SHALL OBTAIN AN ENCROACHMENT PERMIT TO WORK WITHIN THE PUBLIC RIGHT OF WAY, FROM THE CITY OF NORCO ENGINEERING DEPARTMENT.

14. NO SEWER LATERALS SHALL PASS UNDER A DRIVE APPROACH OR DRIVEWAY.

15. DRIVE APPROACH CENTERLINES SHALL BE STAKED WHEN SEWER LINES ARE STAKED.

16. NO TRENCH BACKFILL SHALL TAKE PLACE WITHOUT PRIOR APPROVAL OF THE CITY'S INSPECTOR.

17. STREET TRENCHING, BACKFILLING AND PAVEMENT REPAIRS SHALL BE IN ACCORDANCE WITH CITY OF NORCO STANDARD DRAWING NO. 155.

18. APPROVAL OF THESE PLANS BY THE CITY OR ITS AGENTS DOES NOT RELIEVE THE ENGINEER AND THE APPLICANT FROM THE RESPONSIBILITY FOR THE CORRECTION OF ERRORS OR OMISSIONS DISCOVERED DURING CONSTRUCTION. UPON REQUEST, THE APPROPRIATE PLAN REVISIONS SHALL BE PROMPTLY SUBMITTED TO THE CITY ENGINEER FOR REVIEW AND APPROVAL.

19. ALL NEW SANITARY SEWERS SHALL BE VIDEOTAPED, WITH TAPE SUPPLIED TO CITY ENGINEER, PRIOR TO CITY'S ACCEPTANCE OF ANY NEW SEWER.

20. ALL SANITARY SEWER APPURTENANCES SHALL BE ABANDONED, RELOCATED AND/OR UPGRADED PER THE DIRECTION OF THE PUBLIC WORKS INSPECTOR, PER CITY OF NORCO STANDARDS, REGARDLESS IF SHOWN ON PLANS OR NOT.

DESIGN NOTE:

FOR ALL NEW STREET CONSTRUCTION, THE LOCATION OF SEWER MAINS SHALL BE SIX (6) FEET EAST OR SOUTH OF STREET CENTERLINE AND MUST BE MINIMUM TEN (10) FEET HORIZONTALLY FROM WATER LINE.

REVISION	NO:	BY:	DATE:	NO:	BY:	DATE:

12/15/04

APPROVED: Joseph S. Schenk 24039
CITY ENGINEER RCE

Drawn By: LJA Date: 03/19/04

GENERAL NOTES (SEWER)

Std. Dwg. No. 011
Sheet 2 of 2

CITY of NORCO STANDARD DRAWING

General Notes: (Storm Drain)

1. THE CONTRACTOR SHALL CONSTRUCT THE STORM DRAIN IMPROVEMENTS SHOWN ON THE DRAWINGS IN CONFORMANCE WITH THE REQUIREMENTS OF THE CITY OF NORCO SPECIAL PROVISIONS AND DETAILED SPECIFICATIONS. THESE DRAWINGS AND THE DATA HEREIN ARE MADE PART OF THE SPECIFICATIONS.

2. PRIOR TO CONSTRUCTION THE CONTRACTOR SHALL OBTAIN AN ENCROACHMENT PERMIT TO WORK WITHIN THE PUBLIC RIGHT OF WAY, FROM THE CITY OF NORCO ENGINEERING DEPARTMENT.

3. ALL WORK SHALL CONFORM TO THE STANDARD SPECIFICATIONS FOR PUBLIC WORKS CONSTRUCTION, RIVERSIDE COUNTY FLOOD CONTROL AND WATER CONSERVATION DISTRICT STANDARD DRAWINGS AND TO THE STANDARD DRAWINGS OF THE CITY OF NORCO, LATEST EDITIONS, UNLESS NOTED OTHERWISE.

4. CONSTRUCTION INSPECTION WILL BE PERFORMED BY THE CITY OF NORCO. THE CONTRACTOR SHALL OBTAIN ALL NECESSARY PERMITS AND SHALL NOTIFY THE CITY INSPECTORS (951) 270-5680 - 24 HOURS PRIOR TO STARTING EACH PHASE OF CONSTRUCTIONS AND PRIOR TO REQUIRING INSPECTION.

5. ALL MATERIALS AND METHODS TO BE SUBJECT TO THE APPROVAL OF THE CITY ENGINEER AND SUPERINTENDENT OF PUBLIC WORKS.

6. ALL STATIONING REFERS TO CENTERLINE OF CONSTRUCTION UNLESS OTHERWISE NOTED.

7. STATIONING FOR LATERALS AND CONNECTOR PIPE REFER TO THE CENTERLINE - CENTERLINE INTERSECTION STATION.

8. STATE LAW (SB 3019) REQUIRES THE CONTRACTOR TO CONTACT UNDERGROUND SERVICE ALERT AND OBTAIN AN INDENTIFICATION NUMBER PRIOR TO THE ISSUANCE OF THE CITY'S ENCROACHMENT PERMIT. THE CONTRACTOR SHALL NOTIFY UNDERGROUND SERVICE ALERT TWO FULL WORKING DAYS (48 HOURS MINIMUM) IN ADVANCE OF ANY CONSTRUCTION ACTIVITIES, INCLUDING PAVEMENT REMOVAL, EXCAVATION AND AC OVERLAY, WHICH COULD AFFECT ANY UNDERGROUND UTILITY.

9. ALL ELEVATIONS SHOWN ARE IN FEET AND DECIMALS THEREOF BASED ON U.S.C. & G.S. DATUM.

10. ELEVATIONS OF UTILITIES ARE APPROXIMATE UNLESS OTHERWISE NOTED.

11. IF ANY EXISTING UTILITIES OR ANY OTHER FACILITIES CONFLICT WITH THE PROPOSED IMPROVEMENTS, WORK SHALL STOP AND THE ENGINEER OF RECORD NOTIFIED IMMEDIATELY.

12. CONTRACTOR SHALL POTHOLE AT TIE-IN STATIONS AND AT ANY OTHER POINTS OF POTENTIAL CONFLICTS WITH UNDERGROUND FACILITIES BEFORE STARTING CONSTRUCTION.

13. BACKFILL MATERIAL TO HAVE A SAND EQUIVALENT (S.E.) OF 30 (MIN.) AND MINIMUM COMPACTION OF 90% . ALL TRENCH BACKFILL SHALL BE DONE IN ACCORDANCE WITH THE STANDARD SPECIFICATIONS OF THE CITY OF NORCO.

14. BACKFILL TO BE IN 8" LIFTS IF TRENCH BOTTOM AND SIDES HAVE A S.E. LESS THAN 20.

15. NO TRENCH MAY LEFT OPEN OVERNIGHT UNLESS AUTHORIZED IN WRITING BY THE CITY ENGINEER.

16. TRENCHES SHALL HAVE SHAPED BEDDING WITH THE TOP 12" OVER PIPE BEING COLORED SAND, UNLESS OTHERWISE NOTED ON PLANS. COLOR TO BE APPROVED BY THE FIELD INSPECTOR.

17. BEDDING PIPE WITH LESS THAN TWO FEET OF COVER SHALL CONFORM TO LOS ANGELES COUNTY FLOOD CONTROL DISTRICT STANDARD DRAWINGS 2-D213.3 AND 2-D177 FOR CONCRETE BACKFILL IN TRENCHES. ALL OTHER PIPE SHALL CONFORM TO RCFC & WCD STANDARD DRAWING M815.

18. "V" IS THE DEPTH OF INLET OF CATCH BASINS MEASURED FROM THE TOP OF CURB TO INVERT OUTLET OF CONNECTOR PIPE.

REVISION	NO:	BY:	DATE:	NO:	BY:	DATE:

Drawn By: LJA Date: 03/19/04

12/15/04

APPROVED: Joseph L. Schenk 24039
CITY ENGINEER RCE

GENERAL NOTES (STORM DRAIN)

Std. Dwg. No. 012
Sheet 1 of 2

CITY of NORCO STANDARD DRAWING

18. "V" IS THE DEPTH OF INLET OF CATCH BASINS MEASURED FROM THE TOP OF CURB TO INVERT OUTLET OF CONNECTOR PIPE.

19. ALL CURBS, GUTTERS, SIDEWALKS, DRIVEWAYS, TRAILS AND OTHER EXISTING IMPROVEMENTS TO BE RECONSTRUCTED IN KIND AND AT THE SAME ELEVATION AND LOCATION AS THE EXISTING IMPROVEMENTS, UNLESS OTHERWISE NOTED.

20. THE CONTRACTOR SHALL DETERMINE THE TRUE LOCATION OF ANY UNDERGROUND UTILITY PRIOR TO LAYING ANY LINES WHICH ARE TO CONNECT TO THE EXISTING SEWER OR STORM DRAINS. THESE LINES SHALL BE EXPOSED AND JOIN ELEVATIONS VERIFIED. ANY CHANGE IN GRADE OR DEVIATION FROM THE PLANS MUST BE APPROVED BY THE CITY ENGINEER.

21. IF CAST IN PLACE PIPE (CIPP) WERE USED IN LIEU OF R.C.P. A SOILS REPORT MUST BE SUBMITTED TO THE CITY OF NORCO.

22. CATCH BASINS SHALL BE LOCATED SO THAT LOCAL DEPRESSIONS SHALL BEGIN AT EXISTING CURB RETURN JOINT, UNLESS OTHERWISE SPECIFIED.

23. NOTICE TO CONTRACTOR: THE EXISTENCE AND LOCATION OF ANY UNDERGROUND UTILITY PIPES OF STRUCTURES SHOWN ON THESE PLANS ARE OBTAINED BY A SEARCH OF THE AVAILABLE RECORDS. APPROVAL OF THESE PLANS BY THE CITY OF NORCO DOES NOT CONSTITUTE A REPRESENTATION AS TO THE ACCURACY OR COMPLETENESS OF THE LOCATION OR EXISTENCE ON NON-EXISTENCE OF ANY UNDERGROUND UTILITY PIPES OR STRUCTURES WITHIN THE LIMITS OF THIS PROJECT. THE CONTRACTOR IS REQUIRED TO TAKE ALL DUE PRECAUTIONARY MEANS TO PROTECT THE UTILITY LINES NOT OF RECORD OR NOT SHOWN ON THESE PLANS.

REVISION	NO:	BY:	DATE:	NO:	BY:	DATE:

Drawn By: LJA Date: 03/19/04

APPROVED: Joseph S. Schenk 24039
CITY ENGINEER RCE

GENERAL NOTES (STORM DRAIN)

Std. Dwg. No. 012
Sheet 2 of 2

CITY of NORCO STANDARD DRAWING

General Notes: (Street)

1. ALL WORK SHALL BE DONE IN ACCORDANCE WITH CITY OF NORCO STANDARD DRAWINGS, STANDARD SPECIAL PROVISIONS, AND THE LATEST EDITION OF THE STANDARD SPECIFICATIONS FOR PUBLIC WORKS CONSTRUCTION, WITH SUPPLEMENTS. ANY VARIATION FROM OR EXCEPTION TO THE STANDARDS OR FOLLOWING GENERAL NOTES MUST BE APPROVED BY THE CITY ENGINEER.

2. ALL EXISTING IMPROVEMENTS INCLUDING CURB AND GUTTERS, SIDEWALKS, ASPHALT/CONCRETE OR P.C.C. PAVING, WHICH ARE BEING JOINED OR MATCHED SHALL BE DONE TO THE SATISFACTION OF THE CITY ENGINEER, INCLUDING NECESSARY SAWCUTTING, REMOVAL, REPLACEMENT AND CAPPING.

3. ANY EXISTING TRAVELWAYS IN WHICH AN EXCAVATION IS MADE IN CONJUNCTION WITH THIS PROJECT SHALL BE COVERED BY AN ENCROACHMENT PERMIT. THIS AREA SHALL BE PROPERLY POSTED AND LIGHTED IN CONFORMANCE WITH THE STATE MANUAL OF WARNING SIGNS, LIGHTS, AND DEVICES FOR USE IN PERFORMANCE OF WORK UPON HIGHWAYS IN ORDER TO ELIMINATE ANY HAZARDS. STREET SHALL BE SURFACED WITH A MINIMUM OF 2" OF ASPHALT AT THE END OF EACH WORKING DAY.

4. THE CONTRACTOR SHALL OBTAIN ALL NECESSARY PERMITS AND SHALL NOTIFY THE CITY FIELD INSPECTORS (951-270-5680) AT LEAST 48 HOURS PRIOR TO STARTING EACH PHASE OF CONSTRUCTION AND PRIOR TO REQUIRING INSPECTION.

5. ALL UTILITIES SHALL BE INSTALLED PRIOR TO PAVING OF THE STREETS. ALL TRENCHES SHALL BE FULLY COMPACTED TO THE SATISFACTION OF THE CITY ENGINEER. ALL MANHOLES AND VALVE BOX FRAMES SHALL BE ADJUSTED TO FINISHED GRADES AFTER COMPLETION OF CONSTRUCTION.

6. THE CONTRACTOR SHALL DETERMINE THE TRUE LOCATION OF ANY UNDERGROUND UTILITY PRIOR TO LAYING ANY LINES WHICH ARE TO CONNECT THE EXISTING SEWER, WATER, OR STORM DRAINS. THESE LINES SHALL BE EXPOSED AND JOIN ELEVATIONS VERIFIED. ANY CHANGE IN GRADE OR DEVIATION FROM THE PLANS MUST BE APPROVED BY THE CITY ENGINEER.

7. ADVERTISING SIGNS WILL NOT BE PERMITTED WITHIN THE STREET RIGHT-OF-WAY.

8. TREES SHALL BE PLANTED WITHIN THE STREET RIGHT-OF-WAY IN ACCORDANCE WITH THE CITY OF NORCO REQUIREMENTS.

9. STRUCTURAL SECTION OF PAVEMENT SHALL BE DETERMINED BY THE PRIVATE SOILS ENGINEER. THE PRIVATE SOILS ENGINEER SHALL FURNISH THE RESULTS OF R-VALUE TESTS AND STRUCTURAL SECTION CALCULATIONS TO THE CITY ENGINEER FOR APPROVAL.

10. COMPACTION TESTING SHALL BE PERFORMED BY THE SOILS ENGINEER TO THE SATISFACTION OF THE CITY ENGINEER. THE SUBGRADE SHALL BE COMPACTED TO 90% WITH THE TOP ONE FOOT BELOW THE ASPHALT PAVING COMPACTED TO 95%. IF THE AGGREGATE BASE IS THICKER THAN ONE FOOT, THE ENTIRE THICKNESS OF THE BASE MATERIAL SHALL BE COMPACTED TO 95%.

11. SEWER MAIN AND LATERALS SHALL BE CONSTRUCTED, BACKFILL COMPACTED, AND TESTED PRIOR TO CONSTRUCTION OF CURB AND GUTTER.

12. THE CURB AND GUTTER SHALL BE "ETCHED" SHOWING LATERAL LOCATIONS "S" FOR SEWER, "G" FOR GAS, "E" FOR ELECTRICAL AND "W" FOR WATER.

13. TRAFFIC CONTROL AND SAFETY DEVICES SHALL BE PLACED AND MAINTAINED PER THE STATE OF CALIFORNIA DEPARTMENT OF TRANSPORTATION, MANUAL OF WARNING SIGNS LIGHTS, AND DEVICES FOR USE IN PERFORMANCE OF WORK UPON HIGHWAYS AND TO THE SATISFACTION OF THE CITY ENGINEER.

REVISION	NO:	BY:	DATE:	NO:	BY:	DATE:

12/15/04

APPROVED: Joseph S. Schenk 24039
CITY ENGINEER RCE

Drawn By: LJA Date: 03/19/04

GENERAL NOTES (STREET)

Std. Dwg. No. 013
Sheet 1 of 3

CITY of NORCO STANDARD DRAWING

14. NOTICE TO CONTRACTORS: THE EXISTENCE AND LOCATION OF ANY UNDERGROUND UTILITY PIPES OR STRUCTURES SHOWN ON THESE PLANS ARE OBTAINED BY A SEARCH OF THE AVAILABLE RECORDS. APPROVAL OF THESE PLANS BY THE CITY OF NORCO DOES NOT CONSTITUTE A REPRESENTATION AS TO THE ACCURACY OR COMPLETENESS OF THE LOCATION OR EXISTENCE OR NON-EXISTENCE OF ANY UNDERGROUND UTILITY PIPE OR STRUCTURE WITHIN THE LIMITS OF THIS PROJECT. THE CONTRACTOR IS REQUIRED TO TAKE ALL DUE PRECAUTIONARY MEANS TO PROTECT THE UTILITY LINES NOT OF RECORD OR NOT SHOWN ON THESE PLANS.

15. PRIVATE ENGINEER'S NOTICE: PRIOR TO CONSTRUCTION, SEWER AND WATER CONTRACTORS SHALL ASCERTAIN THE CORRECTNESS OF WATER SERVICES AND SEWER LATERAL LOCATIONS WITH THE DEVELOPER. ANY DEVIATION FROM LOCATIONS SHOWN ON THESE PLANS SHALL BE REPORTED TO THE ENGINEER FOR ADJUSTMENT PRIOR TO CALLING FOR ANY CONSTRUCTION STAKING REQUIRED.

16. PRIOR TO THE CITY RELEASING THE BOND FOR THE PUBLIC IMPROVEMENTS, THE ENGINEER OF RECORD SHALL SUBMIT A COMPLETE SET OF "AS BUILT" PLANS ON MYLAR TO THE CITY ENGINEER. THE TIE SHEETS FOR NECESSARY MONUMENTATION SHALL BE SUBMITTED TO THE CITY.

17. STATE LAW (SB 3019) REQUIRES THE CONTRACTOR TO CONTACT UNDERGROUND SERVICE ALERT AND OBTAIN AN IDENTIFICATION NUMBER PRIOR TO THE ISSUANCE OF THE CITY'S ENCROACHMENT PERMIT. THE CONTRACTOR SHALL NOTIFY UNDERGROUND SERVICE ALERT TWO FULL WORKING DAYS (48 HOURS MINIMUM) IN ADVANCE OF ANY CONSTRUCTION ACTIVITIES, INCLUDING PAVEMENT REMOVAL, EXCAVATION AND A.C. OVERLAY, WHICH COULD AFFECT ANY UNDERGROUND UTILITY.

18. PRIOR TO ANY CONSTRUCTION WORK, THE CONTRACTOR SHALL OBTAIN A CITY BUSINESS LICENSE AND AN ENCROACHMENT PERMIT.

19. PRIOR TO TAKING ANY WATER FROM A FIRE HYDRANT, THE CONTRACTOR SHALL MAKE ARRANGEMENTS TO OBTAIN A FIRE HYDRANT WATER METER.

20. ALL STREET TRENCHING, BACKFILLING AND PAVEMENT REPAIRS SHALL BE DONE IN ACCORDANCE WITH CITY STANDARD DRAWING NO. 155.

21. ALL IRRIGATION LINES TO BE REMOVED, RELOCATED OR RECONSTRUCTED AS SHOWN AND/OR AS DIRECTED BY THE PUBLIC WORKS INSPECTOR IN THE FIELD.

22. CONTRACTOR SHALL REMOVE AND/OR INSTALL PAVEMENT MARKINGS AND STRIPING. PLACEMENT AND SCHEDULING TO BE DETERMINED BY INSPECTOR IN THE FIELD.

23. THE CONTRACTOR SHALL NOT ORDER OR PLACE ANY PORTLAND CEMENT CONCRETE OR ASPHALT CONCRETE PAVING UNTIL THE FORMS AND SUBGRADE AND/OR AGGREGATE BASE HAVE BEEN INSPECTED AND APPROVED BY THE PUBLIC WORKS INSPECTOR IN THE FIELD.

24. STRICT ADHERENCE TO DUST CONTROL REQUIREMENTS SHALL BE ENFORCED, AND ALL DUST SHALL BE CONTROLLED BY WATERING, UNLESS OTHERWISE APPROVED BY THE CITY ENGINEER.

25. IF ANY EXISTING UTILITIES OR ANY OTHER FACILITIES CONFLICT WITH THE PROPOSED IMPROVEMENTS, WORK SHALL STOP AND THE ENGINEER SHALL BE NOTIFIED IMMEDIATELY.

26. THE FINAL OR SURFACE LAYER OF ASPHALT CONCRETE SHALL NOT BE PLACED UNTIL ALL ON-SITE IMPROVEMENTS HAVE BEEN COMPLETED, INCLUDING ALL GRADING AND UNTIL ALL UNACCEPTABLE CONCRETE AND/OR ASPHALT WORK HAS BEEN REMOVED AND REPLACED, UNLESS OTHERWISE APPROVED BY THE ENGINEER.

27. ALL PERMANENT TRAFFIC CONTROL SIGNS AND DEVICES SHALL BE LOCATED AS SPECIFIED IN THE FIELD BY THE CITY ENGINEER PRIOR TO FINAL APPROVAL OF IMPROVEMENTS.

28. REPAIR OR REPLACE ANY DAMAGED OR ALTERED EXISTING IMPROVEMENTS WITHIN PUBLIC RIGHT-OF-WAY AS DIRECTED BY THE ENGINEER IN THE FIELD.

REVISION	NO:	BY:	DATE:	NO:	BY:	DATE:

12/15/04

APPROVED: Joseph D. Schenk 24039
CITY ENGINEER RCE

Drawn By: LJA Date: 03/19/04

GENERAL NOTES (STREET)

Std. Dwg. No. 013
Sheet 2 of 3

CITY of NORCO STANDARD DRAWING

29. ALL SURVEY MONUMENTS SHALL BE PROTECTED AND PERPETUATED IN PLACE. ANY DISTURBED OR COVERED MONUMENTS SHALL BE RESET BY A QUALIFIED REGISTERED CIVIL ENGINEER OR A LICENSED LAND SURVEYOR.

30. ANY CONTRACTOR PERFORMING WORK ON THIS PROJECT SHALL FAMILIARIZE THEMSELVES WITH THE WORK SITE AND SHALL BE SOLELY RESPONSIBLE FOR ANY DAMAGE TO EXISTING FACILITIES RESULTING DIRECTLY OR INDIRECTLY FROM THEIR OPERATIONS, WHETHER OR NOT SUCH FACILITIES ARE SHOWN ON THESE PLANS.

31. CARE SHOULD BE TAKEN TO PREVENT GRADED DITCHES AND SWALES FROM UNDERMINING STREET IMPROVEMENTS. UPON INSPECTION OF THE SITES, THE CITY ENGINEER MAY REQUIRE TEMPORARY GUNITE SWALES, ENTERING OR LEAVING IMPROVEMENTS.

32. APPROVAL OF THESE PLANS BY THE CITY OR ITS AGENTS DOES NOT RELIEVE THE ENGINEER AND THE APPLICANT FROM THE RESPONSIBILITY FOR THE CORRECTION OF ERRORS OR OMISSIONS DISCOVERED DURING CONSTRUCTION. UPON REQUEST, THE APPROPRIATE PLAN REVISIONS SHALL BE PROMPTLY SUBMITTED TO THE CITY ENGINEER FOR REVIEW AND APPROVAL.

REVISION	NO:	BY:	DATE:	NO:	BY:	DATE:

Drawn By: LJA Date: 03/19/04

12/15/04

APPROVED: Joseph S. Schenk 24039
CITY ENGINEER RCE

GENERAL NOTES (STREET)

Std. Dwg. No.
013
Sheet 3 of 3

CITY of NORCO STANDARD DRAWING

General Notes: (Water)

1. ALL WORK SHALL BE IN ACCORDANCE WITH THESE PLANS, THE CITY OF NORCO STANDARD DRAWINGS, STANDARD SPECIAL PROVISIONS, AND THE LATEST EDITION OF STANDARD SPECIFICATIONS FOR PUBLIC WORKS CONSTRUCTION, WITH SUPPLEMENTS. ANY VARIATION FROM OR EXCEPTING TO THE STANDARDS OR FOLLOWING GENERAL NOTES MUST BE APPROVED BY THE CITY ENGINEER.

2. THIS DRAWING AND DATA HEREIN ARE MADE PART OF THE SPECIFICATIONS.

3. BEFORE WORK MAY BE STARTED, THE CONTRACTOR MUST OBTAIN AN ENCROACHMENT PERMIT FROM THE PUBLIC WORKS DEPARTMENT TO EXCAVATE IN THE CITY OF NORCO.

4. INSPECTION SHALL BE CALLED FOR THROUGH THE CITY OF NORCO ENGINEERING DEPARTMENT (951) 270-5680, 48 HOURS PRIOR TO START OF CONSTRUCTION AND 24 HOURS PRIOR TO ANY REQUIRED INSPECTION.

5. ALL CONNECTIONS TO THE WATER MAINS SHALL BE MADE BY THE CONTRACTOR UNDER THE SUPERVISION OF THE DIRECTOR OF PUBLIC WORKS OR PUBLIC WORKS CONSTRUCTION INSPECTOR OF THE CITY OF NORCO.

6. THE CONTRACTOR SHALL MAKE ARRANGEMENTS WITH THE DIRECTOR OF PUBLIC WORKS FOR WATER SHUT-OFF AND SHALL NOT OPERATE ANY MAINLINE WATER VALVES.

7. WATER SERVICES TO BE A MINIMUM OF 10' HORIZONTAL DISTANCE FROM SEWER LATERALS.

8. ALL VALVE BOXES SHALL BE RAISED AND LEVELED BY CONTRACTOR. 8" VALVES AND BELOW REQUIRE 6" VALVE CANS, 10" VALVES & ABOVE REQUIRE 8" VALVE CANS AND CAPS.

9. FIRE HYDRANT STANDARDS: COMMERCIAL: JAMES JONES MODEL J- 3765 TO BE INSTALLED PER CITY OF NORCO STANDARD NO. 445; RESIDENTIAL: JAMES JONES MODEL J-3710.

10. WATER METER BOXES SHALL BE BROUGHT TO GRADE AND LEVELED. BEFORE THE CITY WILL INSTALL ANY WATER METERS, ALL BOXES SHALL BE LOCATED DIRECTLY BEHIND CURB FACE. 1" SERVICES REQUIRE A H&C #438 METER BOX. 2" SERVICES REQUIRE A H&C 666B METER BOX.

11. 4" AND SMALLER WATER VALVES SHALL BE RESILIENT SEAT WEDGE VALVES EPOXY COATED AND AWWA APPROVED. 6" AND LARGER SHALL BE RESILIENT TYPE BUTTERFLY VALVES EPOXY COATED AND AWWA APPROVED.

12. ALL MUNICIPAL WATER MAIN PIPE SHALL BE 10 GAGE STEEL CEMENT MORTAR LINED AND COATED (CML&C).

REVISION	NO:	BY:	DATE:	NO:	BY:	DATE:

12/15/04

APPROVED: Joseph S. Schenk 24039
CITY ENGINEER RCE

Drawn By: LJA Date: 03/19/04

GENERAL NOTES (WATER)

Std. Dwg. No. 014
Sheet 1 of 2

CITY of NORCO STANDARD DRAWING

13. FITTINGS SHALL BE STEEL FLANGED MORTAR LINED (NO CAST IRON).

14. ALL PIPE TO BE LAID ON 4" BED OF CLEAN SAND. ALL PIPE TO BE SHADED WITH CLEAN COLORED SAND TO A DEPTH OF 12" OVER PIPE. SAND BEDDING SHALL BE PER CITY OF NORCO STANDARD PLANS AND SPECIFICATIONS, COLOR TO BE APPROVED BY THE FIELD INSPECTOR.

15. WATER MAINS IN PUBLIC RIGHT-OF-WAY SHALL BE CONSTRUCTED WITH A MINIMUM COVER OF 36 INCHES BELOW FINISHED STREET SURFACE; AND GRADE SHALL BE STRAIGHT, UNLESS OTHERWISE INDICATED IN PLAN OR PROFILE VIEW.

16. PRESSURE TESTING AND CHLORINATION SHALL BE PERFORMED IN ACCORDANCE WITH THE STANDARD SPECIFICATIONS FOR PUBLIC WORKS CONSTRUCTION (LATEST EDITION). PRESSURE TESTS SHALL BE PERFORMED AFTER COMPACTION IS ACHIEVED AND ACCEPTED.

17. A "W" SHALL BE STAMPED ON THE CURB FACE AT ALL LATERAL LOCATIONS.

18. STATE LAW (SB3019) REQUIRES THE CONTRACTOR TO CONTACT UNDERGROUND SERVICE ALERT (USA) AND OBTAIN AN IDENTIFICATION NUMBER PRIOR TO THE ISSUANCE OF THE CITY'S ENCROACHMENT PERMIT. THE CONTRACTOR SHALL NOTIFY USA TWO FULL WORKING DAYS (48 HOURS MINIMUM) IN ADVANCE OF ANY CONSTRUCTION ACTIVITIES.

19. CONTRACTOR IS RESPONSIBLE FOR LOCATING AND IDENTIFYING ALL UNDERGROUND LINES AND SUBSTRUCTURES, OF EVERY NATURE, AND TO PROTECT THEM FROM DAMAGE.

20. THE ENGINEER OF RECORD SHALL FURNISH A COMPLETE SET OF "AS BUILT" PLANS ON MYLAR TO THE CITY ENGINEER AT THE COMPLETION OF THE WATER WORK AND PRIOR TO PAVING OF STREETS, SHOWING LOCATION OF SERVICES.

21. ALL FIRE HYDRANTS WHICH HAVE NOT BEEN ACCEPTED FOR SERVICE SHALL BE COVERED WITH A SACK INDICATING THAT THE HYDRANTS ARE NOT IN SERVICE.

22. APPROVAL OF THESE PLANS BY THE CITY OR ITS AGENTS DOES NOT RELIEVE THE ENGINEER AND THE APPLICANT FROM THE RESPONSIBILITY FOR THE CORRECTION OF ERRORS OR OMISSIONS DISCOVERED DURING CONSTRUCTION. UPON REQUEST, THE APPROPRIATE PLAN REVISIONS SHALL BE PROMPTLY SUBMITTED TO THE CITY ENGINEER FOR REVIEW AND APPROVAL.

23. ALL WATER APPURTENANCES WITHIN THE LIMITS OF THE PROJECT SHALL BE ABANDONED, RELOCATED, AND/OR UPGRADED PER THE DIRECTION OF THE PUBLIC WORKS INSPECTOR, PER CITY OF NORCO STANDARDS, REGARDLESS IF SHOWN ON PLANS OR NOT.

24. ALL NEW WATERLINES SHALL BE VIDEOTAPED, WITH TAPE SUPPLIED TO THE CITY ENGINEER, PRIOR TO CITY'S ACCEPTANCE OF ANY NEW WATERLINE.

DESIGN NOTE:

FOR ALL NEW STREET CONSTRUCTION, THE LOCATION OF WATER MAINS SHALL BE 6' NORTH OR WEST OF STREET CENTERLINE AND MUST BE A MINIMUM OF TEN (10) FEET APART FROM SEWER.

REVISION	NO:	BY:	DATE:	NO:	BY:	DATE:

12/15/04

APPROVED: Joseph S. Schenk 24039
CITY ENGINEER RCE

Drawn By: LJA Date: 03/19/04

GENERAL NOTES (WATER)

Std. Dwg. No. 014
Sheet 2 of 2

50

DRAFTING STANDARDS

CITY of NORCO STANDARD DRAWING

DIMENSION LINE OR EXTENSION LINE

℄ CENTER LINE

CURB AND GUTTER

RAILROAD TRACK

R/W, ℙ RIGHT-OF-WAY, PROPERTY LINE

BOUNDARY LINE (IMPROVEMENT JOIN LIMIT)

FLOW LINE

—X—X— FENCE (LABEL TYPE)

—— * —— UTILITY LINE (*=LISTED BELOW)

E = ELECTRICAL	SD = STORM DRAIN
G = GAS	T = TELEPHONE
I = IRRIGATION	TV = TELEVISION CABLE
O = OIL	W = WATER
S = SEWER	X = INDUSTRIAL WASTE

HIDDEN LINE (EXISTING IMPROVEMENTS)

OBJECT LINE (PROJECT IMPROVEMENTS)

EDGE OF PAVEMENT (HATCH MARKS ON PAVEMENT SIDE)

CONCRETE

PAVEMENT TO BE OVERLAID

REMOVE IMPROVEMENTS (GHOSTED)

A.C. PAVEMENT (GHOSTED)

BUILDING

SHRUB

TREE (SHOW TRUNK DIAMETER)

PALM TREE

REVISION	NO:	BY:	DATE:	NO:	BY:	DATE:

Drawn By: LJA Date: 3/19/04

APPROVED: Joseph Schenk 24039
CITY ENGINEER RCE

DRAFTING STANDARDS AND TOPOGRAPHIC SYMBOLS

Std. Dwg. No. 50A
Sheet 1 of 1

CITY of NORCO STANDARD DRAWING

MONUMENT

BENCH MARK

TEST BORING

MANHOLES

TERMINAL CLEANOUTS; PROPOSED, EXISTING

TOPOGRAPHIC VALVE SYMBOLS; GENERAL (LABEL TYPE), BLOW–OFF

DRAFTING VALVE SYMBOLS; GENERAL (LABEL TYPE), GATE, BALL, CHECK, 3–WAY DIVERTER

REDUCERS (LABEL SIZE); EXISTING CONCENTRIC, PROPOSED ECCENTRIC (SHOW C L OFFSET)

FLANGE CONNECTION

REMOVABLE SPOOL OR FILTER

THRUST BLOCKS; PROPOSED, EXISTING

CITY ELECTROLIER – 75–150 WATTS

UTILITY POLE & GUY ANCHOR (LABEL POLE NUMBER)

WATER METER, GAS METER

PULL BOXES; PROPOSED, EXISTING

TRAAFFIC SIGNAL DETECTOR

TRAFFIC SIGN

TRAFFIC SIGNAL

TRAFFIC SIGNAL CONTROLLER

FIRE HYDRANTS; PROPOSED, EXISTING

FIXTURES; SPRINKLER HEAD, HOSE BIB

REVISION	NO:	BY:	DATE:	NO:	BY:	DATE:

Drawn By: LJA

Date: 03/19/04

APPROVED: Joseph Schenk 24039
CITY ENGINEER RCE

DRAFTING STANDARDS AND TOPOGRAPHIC SYMBOLS

Std. Dwg. No.
50B
Sheet 1 of 1

100
STREET
STANDARDS

CITY of NORCO STANDARD DRAWING

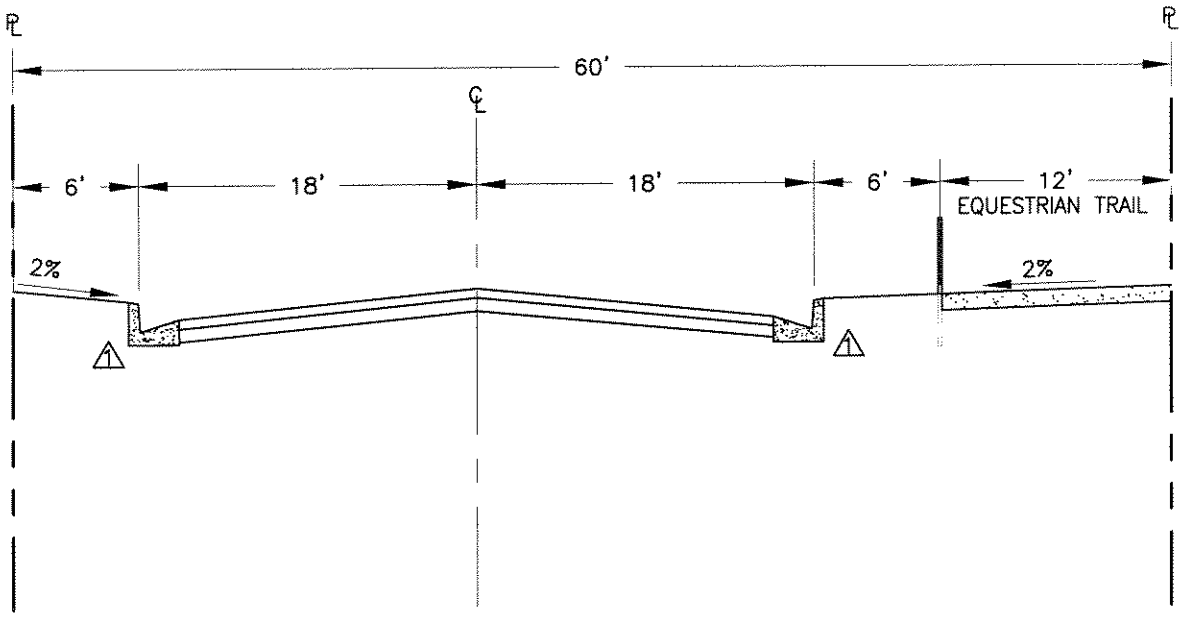

NOTES:

1. STRUCTURAL SECTION OF ROADWAY SHALL BE DETERMINED FROM SOILS TESTS AND SO INDICATED ON CONSTRUCTION PLANS, BUT IN NO CASE LESS THAN WHAT IS DESIGNATED ON STD. DWG. 830.

2. TYPICAL SLOPE STANDARDS MAY REQUIRE SLOPE EASEMENTS.

3. CENTERLINE GRADES ARE 0.40% MIN. FOR EAST–WEST AND 0.60% OR GREATER FOR NORTH–SOUTH.

4. CURB RETURN RADIUS SHALL BE 25 FEET.

REVISION	NO:	BY:	DATE:	NO:	BY:	DATE:
	1	LJA	02/07/06			

Drawn By: LJA Date: 03/19/04

APPROVED: CITY ENGINEER C27172 RCE

TYPICAL STREET SECTION (W=60')

Std. Dwg. No. 100

Sheet 1 of 1

CITY of NORCO STANDARD DRAWING

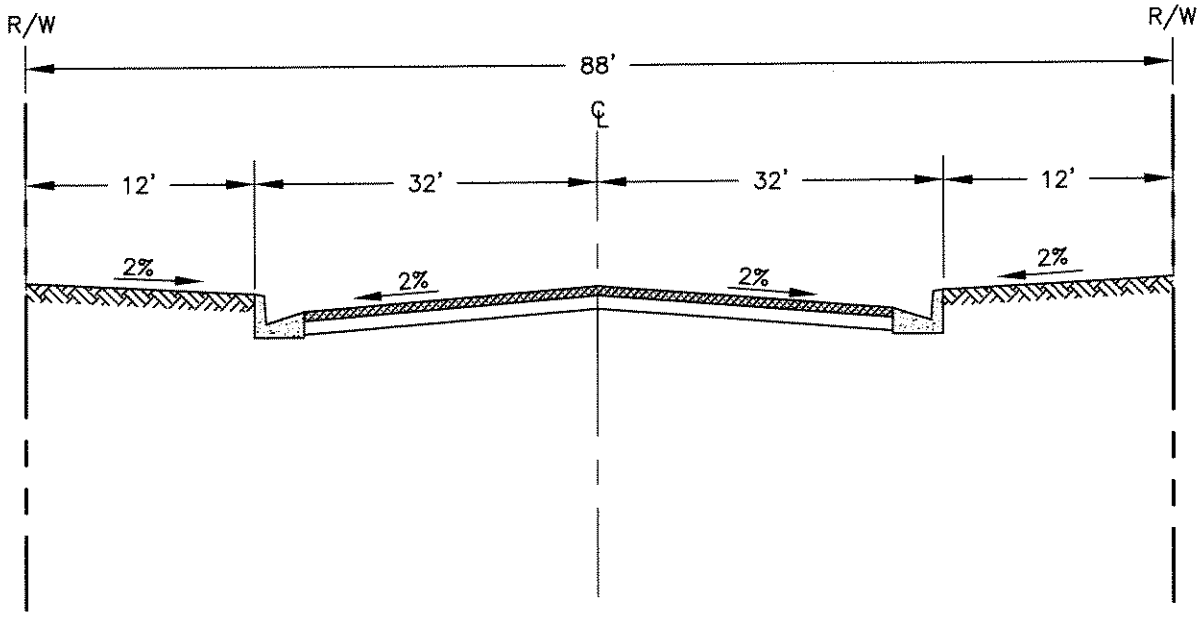

NOTES:

1. STRUCTURAL SECTION OF ROADWAY SHALL BE DETERMINED FROM SOILS TESTS AND SO INDICATED ON CONSTRUCTION PLANS, BUT IN NO CASE LESS THAN WHAT IS DESIGNATED ON STD. DWG. 830.

2. TYPICAL SLOPE STANDARDS MAY REQUIRE SLOPE EASEMENTS.

3. CENTERLINE GRADES ARE 0.40% MIN. FOR EAST–WEST AND 0.60% OR GREATER FOR NORTH–SOUTH.

4. CURB RETURN RADIUS SHALL BE 35 FEET.

REVISION	NO:	BY:	DATE:	NO:	BY:	DATE:

Drawn By: LJA Date: 03/19/04

APPROVED: Joseph Schenk 24039
CITY ENGINEER RCE

TYPICAL STREET SECTION (W=88')

Std. Dwg. No. 110
Sheet 1 of 1

CITY of NORCO STANDARD DRAWING

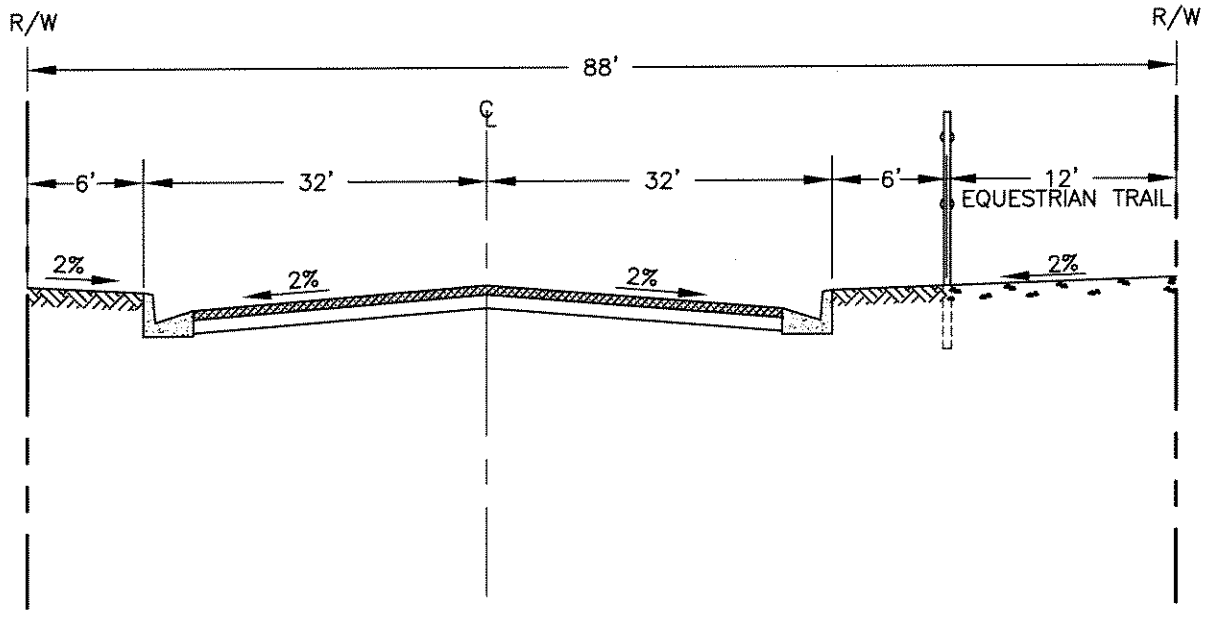

NOTES:

1. STRUCTURAL SECTION OF ROADWAY SHALL BE DETERMINED FROM SOILS TESTS AND SO INDICATED ON CONSTRUCTION PLANS, BUT IN NO CASE LESS THAN WHAT IS DESIGNATED ON STD. DWG. 830.

2. TYPICAL SLOPE STANDARDS MAY REQUIRE SLOPE EASEMENTS.

3. CENTERLINE GRADES ARE 0.40% MIN. FOR EAST–WEST AND 0.60% OR GREATER FOR NORTH–SOUTH.

4. CURB RETURN RADIUS SHALL BE 35 FEET.

REVISION	NO:	BY:	DATE:	NO:	BY:	DATE:

Drawn By: LJA Date: 03/19/04

APPROVED: Joseph Schenk 24039
CITY ENGINEER RCE

TYPICAL STREET SECTION (W=88') W/EQUESTRIAN TRAIL

Std. Dwg. No. 115
Sheet 1 of 1

CITY of NORCO STANDARD DRAWING

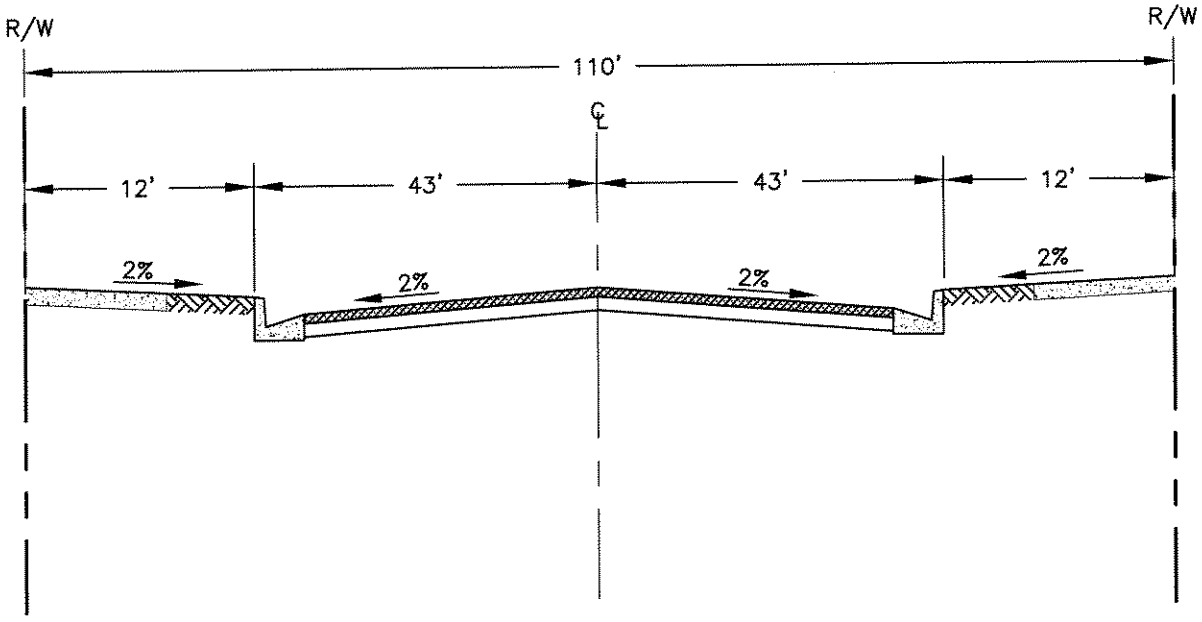

NOTES:

1. STRUCTURAL SECTION OF ROADWAY SHALL BE DETERMINED FROM SOILS TESTS AND SO INDICATED ON CONSTRUCTION PLANS, BUT IN NO CASE LESS THAN WHAT IS DESIGNATED ON STD. DWG. 830.

2. TYPICAL SLOPE STANDARDS MAY REQUIRE SLOPE EASEMENTS.

3. CENTERLINE GRADES ARE 0.40% MIN. FOR EAST–WEST AND 0.60% OR GREATER FOR NORTH–SOUTH.

4. CURB RETURN RADIUS SHALL BE 35 FEET.

REVISION	NO:	BY:	DATE:	NO:	BY:	DATE:

Drawn By: LJA Date: 03/19/04

APPROVED: Joseph Schenk 24039
CITY ENGINEER RCE

TYPICAL STREET SECTION (W=110')

Std. Dwg. No.
120A
Sheet 1 of 1

CITY of NORCO STANDARD DRAWING

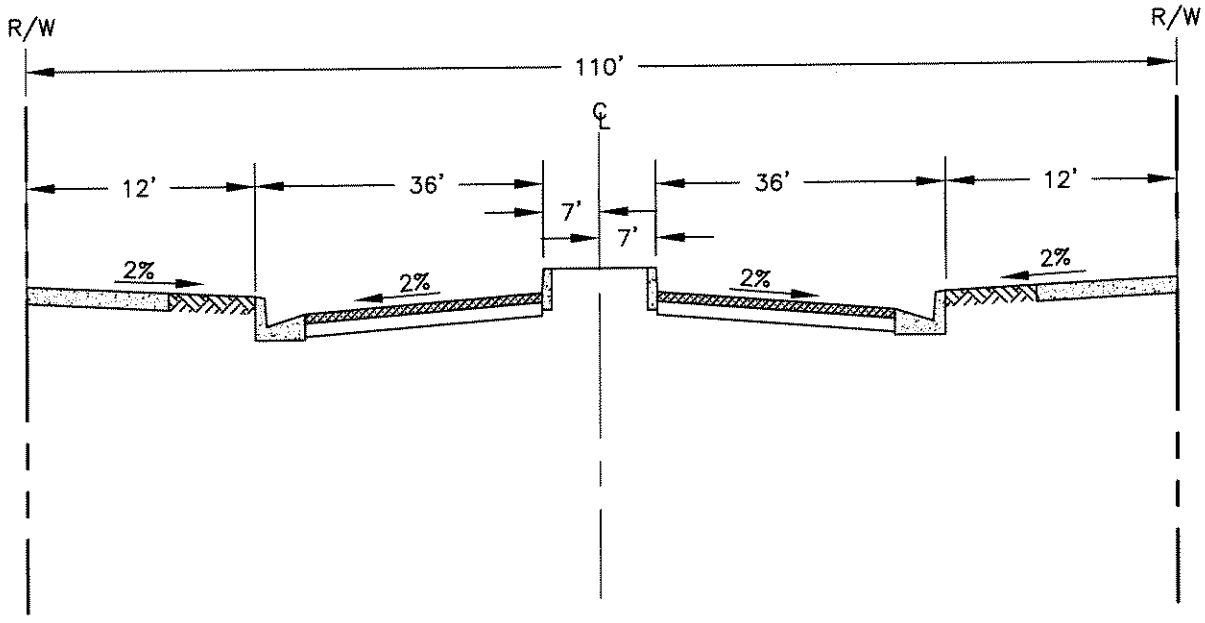

NOTES:

1. STRUCTURAL SECTION OF ROADWAY SHALL BE DETERMINED FROM SOILS TESTS AND SO INDICATED ON CONSTRUCTION PLANS, BUT IN NO CASE LESS THAN WHAT IS DESIGNATED ON STD. DWG. 830.

2. TYPICAL SLOPE STANDARDS MAY REQUIRE SLOPE EASEMENTS.

3. CENTERLINE GRADES ARE 0.40% MIN. FOR EAST–WEST AND 0.60% OR GREATER FOR NORTH–SOUTH.

4. CURB RETURN RADIUS SHALL BE 35 FEET.

REVISION	NO:	BY:	DATE:	NO:	BY:	DATE:

Drawn By: LJA Date: 03/19/04

APPROVED: Joseph Schenk 24039
CITY ENGINEER RCE

TYPICAL STREET SECTION (W=110') W/RAISED MEDIAN

Std. Dwg. No. 120B
Sheet 1 of 1

CITY of NORCO STANDARD DRAWING

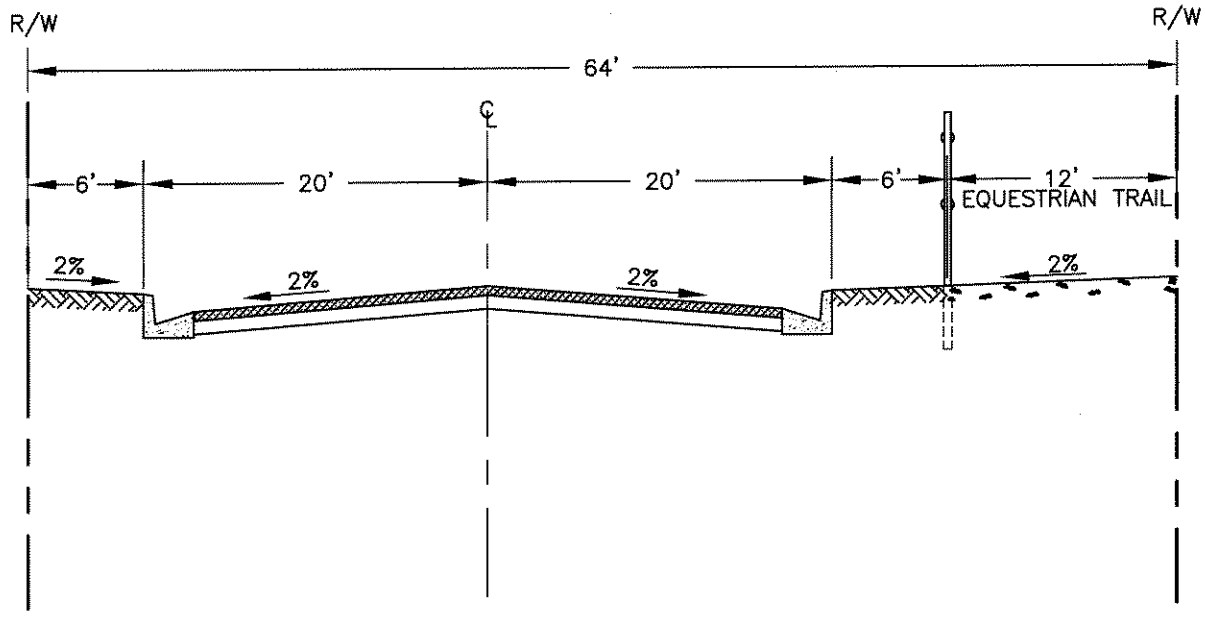

NOTES:

1. STRUCTURAL SECTION OF ROADWAY SHALL BE DETERMINED FROM SOILS TESTS AND SO INDICATED ON CONSTRUCTION PLANS BUT IN NO CASE LESS THAN WHAT IS DESIGNATED ON STD. DWG. 830.

2. TYPICAL SLOPE STANDARDS MAY REQUIRE SLOPE EASEMENTS.

3. CENTERLINE GRADES ARE 0.40% MIN. FOR EAST–WEST AND 0.60% OR GREATER FOR NORTH–SOUTH.

4. CURB RETURN RADIUS SHALL BE 25 FEET.

REVISION	NO:	BY:	DATE:	NO:	BY:	DATE:

Drawn By: LJA Date: 03/19/04

APPROVED: Joseph Schenk 24039
CITY ENGINEER RCE

TYPICAL STREET SECTION (W=64') W/EQUESTRIAN TRAIL

Std. Dwg. No. 125
Sheet 1 of 1

CITY of NORCO STANDARD DRAWING

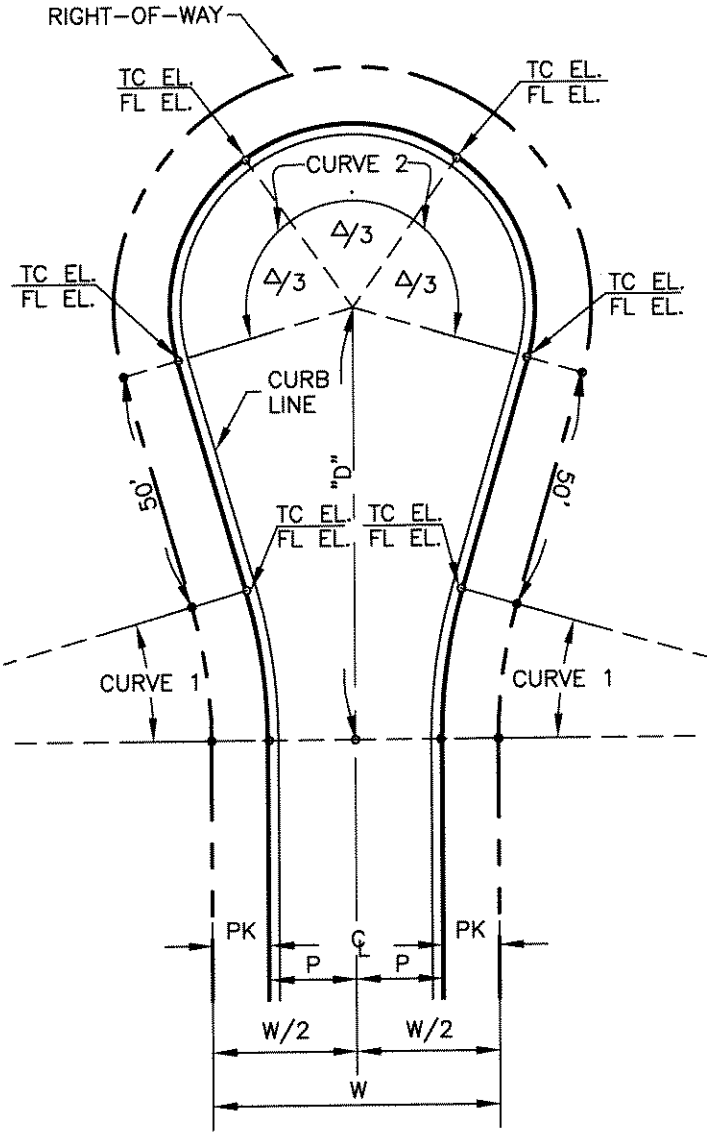

					CURVE 1							CURVE 2						
					△	CURB			PROPERTY			△	CURB			PROPERTY		
W	W/2	P	PK	D		R	L	T	R	L	T		R	L	T	R	L	T
60'	30'	18'	12'	90.00'	16°15'37"	112'	31.79'	16.00'	100'	28.38'	14.29'	212°31'13"	38'	140.95'	130.27'	50'	185.46'	171.43'

REVISION	NO:	BY:	DATE:	NO:	BY:	DATE:

Drawn By: LJA

Date: 03/19/04

APPROVED: Joseph Schenk 24039
CITY ENGINEER RCE

CUL-DE-SAC (SYMMETRICAL)

Std. Dwg. No.
140A
Sheet 1 of 1

CITY of NORCO STANDARD DRAWING

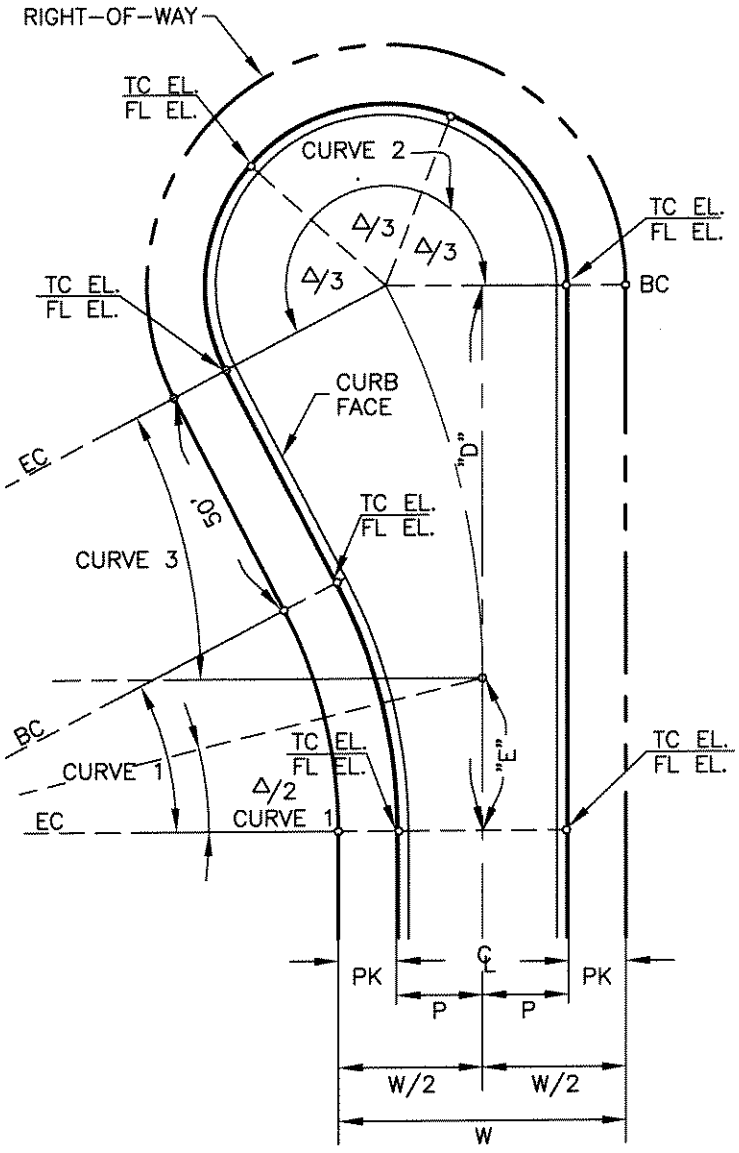

					CURVE 1					CURVE 2					CURVE 3			
					△	CURB		PROPERTY		△	CURB		PROPERTY			△		
W	W/2	P	PK	D		R	L	R	L		R	L	R	L	E		R	L
60'	30'	18'	12'	113.58'	27°28'54"	112'	53.72'	100'	47.96'	207°28'54"	38'	137.61'	50'	181.06'	31.79'	27°28'54"	177.24'	85.01'

REVISION	NO:	BY:	DATE:	NO:	BY:	DATE:

Drawn By: LJA

Date: 03/19/04

APPROVED: Joseph Schenk 24039
CITY ENGINEER RCE

CUL-DE-SAC (OFF-SET)

Std. Dwg. No.
140B
Sheet 1 of 1

CITY of NORCO STANDARD DRAWING

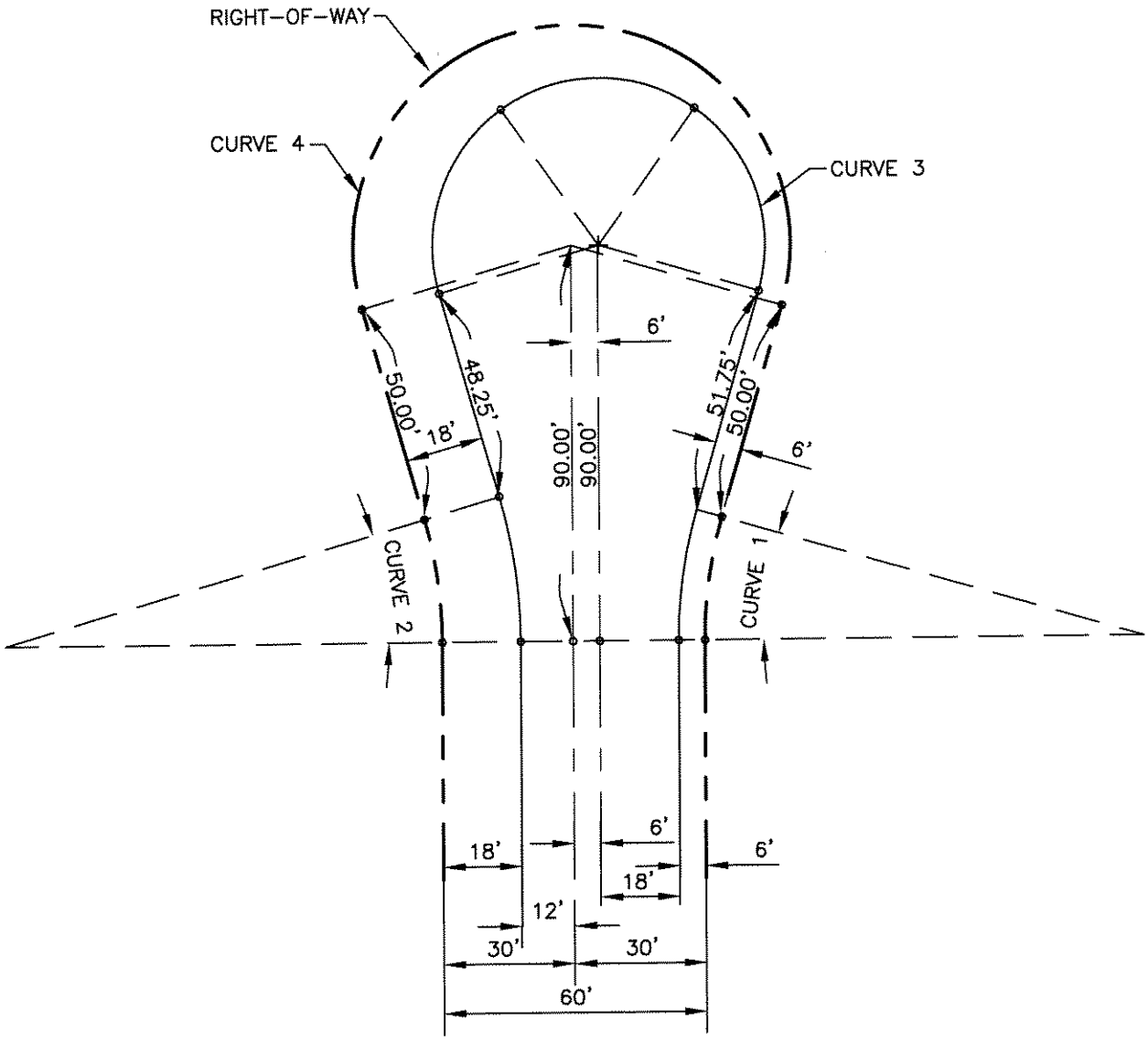

CURVE 3			
△	CURB		
	R	L	T
212°31'13"	38'	140.95'	130.27'

CURVE 4			
△	PROPERTY		
	R	L	T
212°31'13"	50'	185.46'	171.43'

CURVE 1						
△	CURB			PROPERTY		
	R	L	T	R	L	T
16°15'37"	106'	30.08'	15.14'	100'	28.38'	14.29'

CURVE 2						
△	CURB			PROPERTY		
	R	L	T	R	L	T
16°15'37"	118'	33.49'	16.86'	100'	28.38'	14.29'

REVISION	NO:	BY:	DATE:	NO:	BY:	DATE:

Drawn By: LJA

Date: 3/19/04

APPROVED: Joseph Schenk 24039
CITY ENGINEER RCE

CUL-DE-SAC (SYMMETRICAL)

Std. Dwg. No.
140C
Sheet 1 of 1

CITY of NORCO STANDARD DRAWING

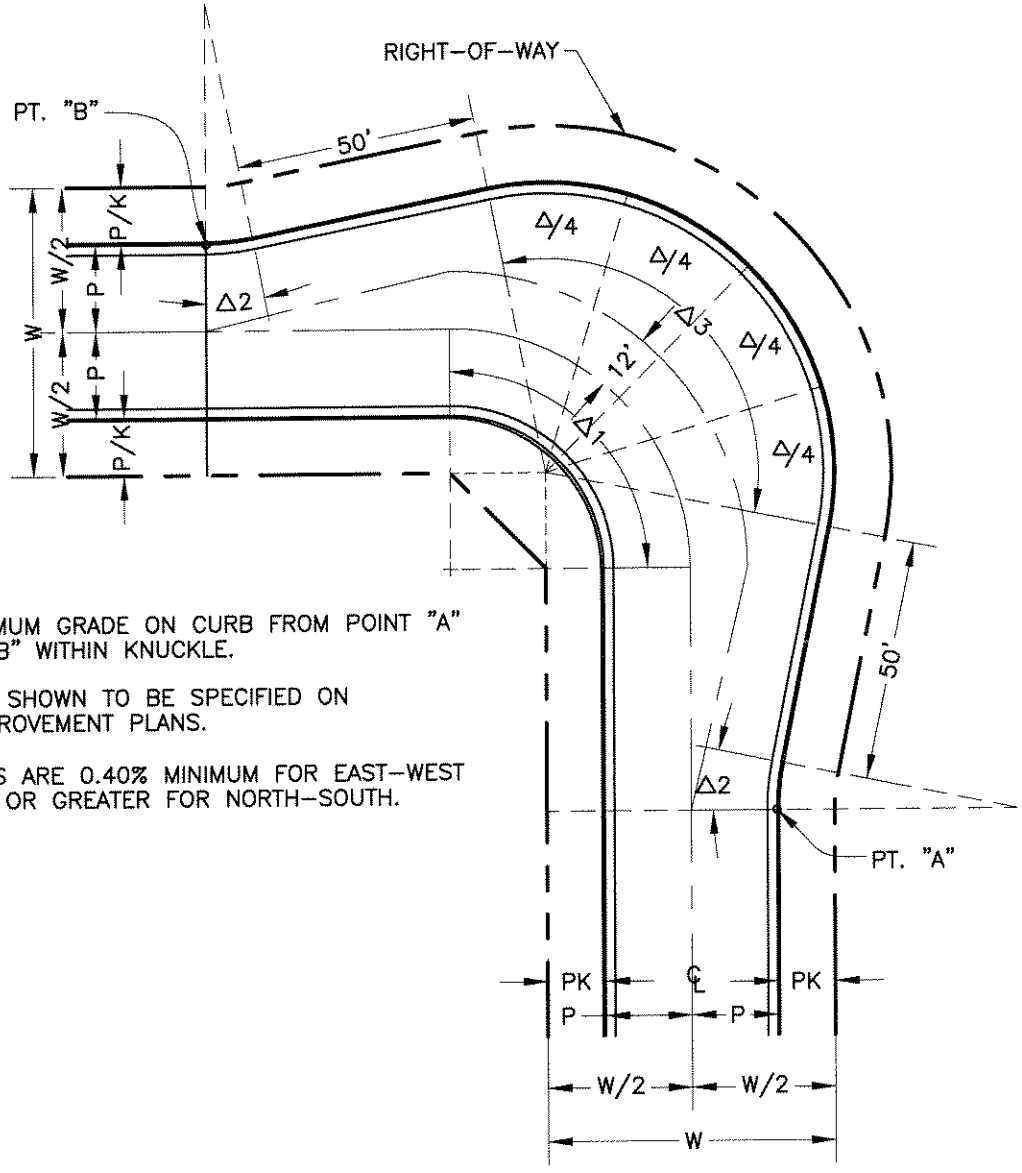

NOTES:

1. 0.60% MINIMUM GRADE ON CURB FROM POINT "A" TO POINT "B" WITHIN KNUCKLE.
2. ELEVATIONS SHOWN TO BE SPECIFIED ON STREET IMPROVEMENT PLANS.
3. C.L. GRADES ARE 0.40% MINIMUM FOR EAST-WEST AND 0.60% OR GREATER FOR NORTH-SOUTH.

				CURVE 1				CURVE 2							CURVE 3						
					CURB				CURB			PROPERTY				CURB			PROPERTY		
W	W/2	P	PK	Δ 1	R	L	T	Δ 2	R	L	T	R	L	T	Δ 3	R	L	T	R	L	T
60'	30'	18'	12'	VARIES	32'	VARIES	VARIES	11°21'25"	50'	9.91'	4.97'	38'	7.53'	3.78'	Δ1+(2 Δ2)	60'	VARIES	VARIES	72'	VARIES	VARIES
60'	30'	20'	10'	VARIES	32'	VARIES	VARIES	9°43'36"	50'	8.49'	4.25'	38'	6.45'	3.23'	Δ1+(2 Δ2)	60'	VARIES	VARIES	72'	VARIES	VARIES

REVISION	NO:	BY:	DATE:	NO:	BY:	DATE:

Drawn By: LJA

Date: 07/14/04

APPROVED: Joseph L. Schenk 24039
CITY ENGINEER RCE

INTERSECTION KNUCKLE

Std. Dwg. No.
145A
Sheet 1 of 1

CITY of NORCO STANDARD DRAWING

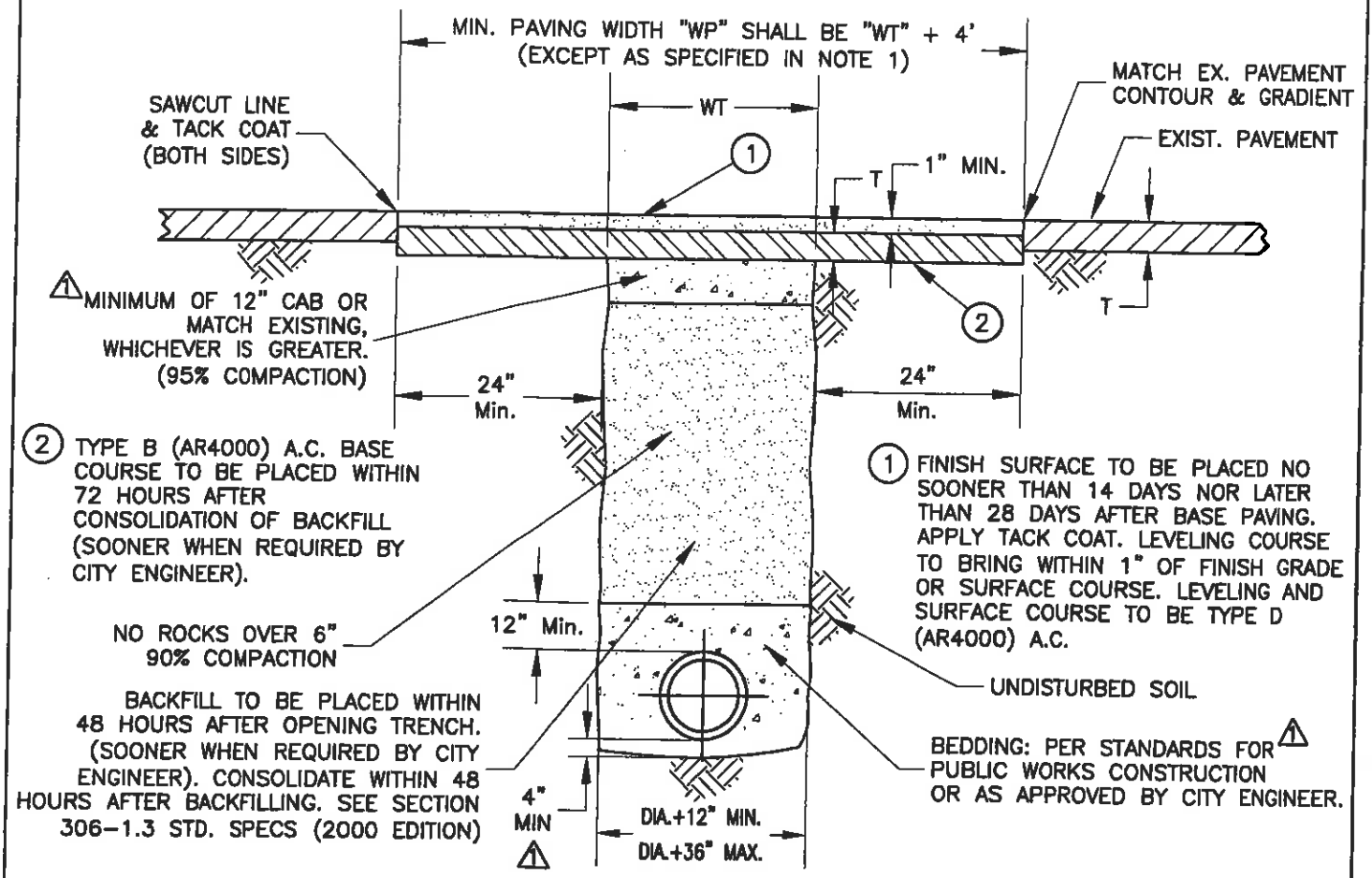

1. MIN. 10' WIDE A.C. PAVEMENT/OVERLAY LAID WITH PAVING MACHINE SHALL BE REQUIRED FOR ALL TRENCH PATCHES IN EXCESS OF 300 L.F., AS DETERMINED BY THE CITY ENGINEER.
2. SPREADER BOXES MAY BE EMPLOYED FOR TRENCH PAVING JOBS LESS THAN 300 L.F. WHEN APPROVED BY THE CITY ENGINEER.
3. STRUCTURAL SECTION SHALL BE REPLACED IN KIND, EXCEPT ASPHALT PAVEMENT SHALL BE EXISTING PLUS ONE INCH.
4. UNLESS OTHERWISE INSTRUCTED BY THE CITY ENGINEER, TRENCH SHALL BE STRAIGHT GRADE ACROSS WIDTH OF TRENCH AND SHOULD NOT BE CROWNED AT CENTER.
5. ON SIXTH STREET AND HAMNER AVENUE, A.C. BASE COURSE SHALL BE PLACED THE SAME DAY OF EXCAVATION AFTER CONSOLIDATION OF BACKFILL (CLASS II C.A.B. REQUIRED) AND FINISH SURFACE SHALL BE PLACED WITHIN 72 HOURS OF EXCAVATION.
6. CONTRACTOR SHALL GIVE 24 HOUR NOTICE FOR INSPECTION PRIOR TO COMMENCEMENT OF ANY WORK.
7. ALL BACKFILLED TRENCHES SHALL BE PAVED WITH TEMPORARY A.C. PAVEMENT AS DIRECTED IN THE FIELD BY THE CITY INSPECTOR UNTIL PERMANENT PAVEMENT IS CONSTRUCTED.
8. RELATIVE COMPACTION IN SIXTH STREET AND HAMNER AVENUE SHALL BE 90% AND 95% IN THE TOP 12" OF SUBGRADE AND ABOVE.
9. THESE DETAILS ARE APPLICABLE TO BACKFILL AND STREET SURFACE REPLACEMENT FOR THE INSTALLATION OF UNDERGROUND FACILITIES AND ANY OTHER EXCAVATION IN CONJUNCTION WITH THE PLACEMENT OR CONSTRUCTION OF SAID FACILITIES.
10. ⚠1 ANY LANE CLOSURE SHALL REQUIRE APPROVAL FROM THE CITY ENGINEER OR DIRECTOR OF PUBLIC WORKS AND THIER RECOMMENDATIONS ADHERED TO.

REVISION	NO:	BY:	DATE:	NO:	BY:	DATE:
	⚠1	LJA	12/12/06			

Drawn By: LJA Date: 10/25/05

APPROVED: C27172 CITY ENGINEER RCE

STREET PAVEMENT REPAIR

Std. Dwg. No. 155
Sheet 1 of 1

200

CURB, GUTTERS AND DRIVEWAY STANDARDS

CITY of NORCO STANDARD DRAWING

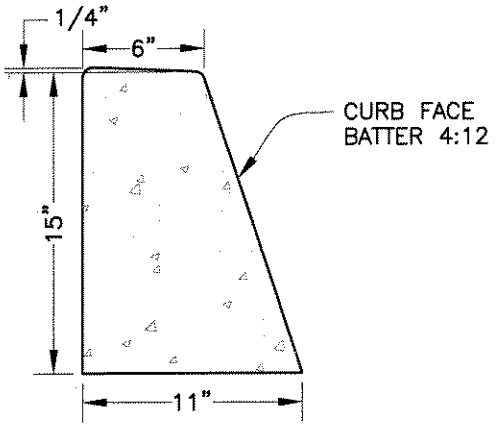

TYPE "A" - CURB ONLY

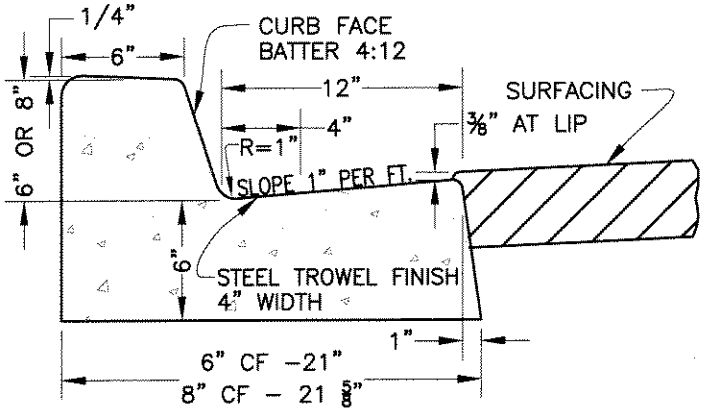

TYPE "B" - INTEGRAL CURB AND GUTTER

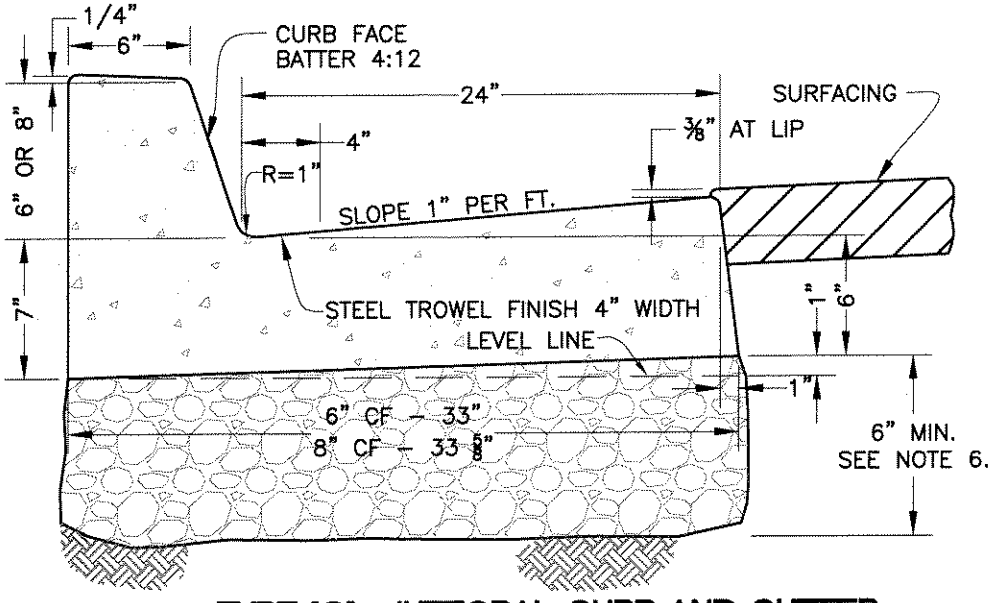

TYPE "C" - INTEGRAL CURB AND GUTTER

(TO BE USED ON ALL NEW STREETS)

NOTES:

1. CONCRETE SHALL BE PER GREENBOOK, SECTION 201-1, MOST CURRENT EDITION.
2. ALL EXPOSED CORNERS SHALL BE FINISHED WITH 1/2" RADIUS.
2. FINISH SHALL BE FINE BROOM.
4. ALL EXISTING PCC SHALL BE SAWCUT PRIOR TO REMOVAL.
5. CURBS SHALL HAVE EXPANSION PAPER AT 60' INTERVALS, AND WEAKENED PLANE JOINT 15' INTERVALS ONLY; NO SCORE LINES ALLOWED.
6. INSTALL A MINIMUM OF 6" CLASS II BASE MATERIAL FOR EXPANSIVE SOILS.
7. 6" CURB MAY BE USED ON LOCAL STREETS AND RESIDENTIAL COLLECTORS IF RUNOFF PERMITS.
8. WHEN CURB IS PLACED BY AN EXTRUSION MACHINE, FINISHING SHALL BE DONE TO PROVIDE AN ACCEPTABLE FINISH AND WEAKENED PLANE JOINT MAY BE SAWCUT.

REVISION	NO:	BY:	DATE:	NO:	BY:	DATE:

Drawn By: LJA Date: 03/19/04

APPROVED: Joseph S. Schenk 24039
CITY ENGINEER RCE

STANDARD CURB DETAILS

Std. Dwg. No.
200
Sheet 1 of 1

CITY of NORCO STANDARD DRAWING

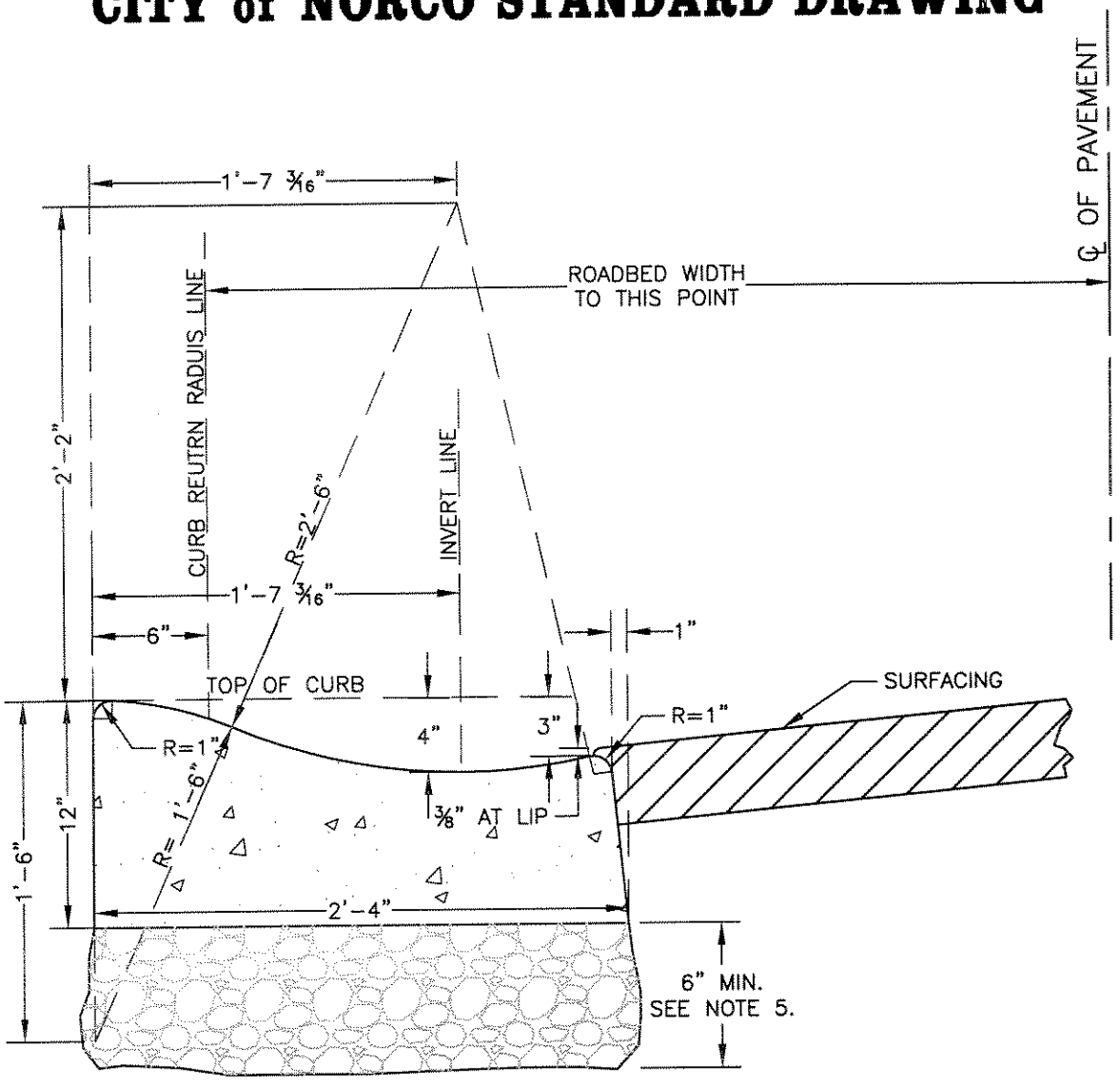

NOTES"

1. CONCRETE SHALL BE PER GREENBOOK, SECTION 201-1, MOST CURRENT EDITION.
2. FINISH SHALL BE FINE BROOM.
3. ALL EXISTING PCC SHALL BE SAWCUT PRIOR TO REMOVAL.
4. CURBS SHALL HAVE EXPANSION PAPER AT 60' INTERVALS, AND WEAKENED PLANE JOINT 15' INTERVALS ONLY; NO SCORE LINES ALLOWED.
5. INSTALL A MINIMUM OF 6" CLASS II BASE MATERIAL FOR EXPANSIVE SOILS.
6. WHEN CURB IS PLACED BY AN EXTRUSION MACHINE, FINISHING SHALL BE DONE TO PROVIDE AN ACCEPTABLE FINISH AND WEAKENED PLANE JOINT MAY BE SAWCUT.

1.789 CU. FT/L.F.
CU. YD. = 15.09 L.F.
MINIMUM PERMISSIBLE GRADE 0.40%

REVISION	NO:	BY:	DATE:	NO:	BY:	DATE:

Drawn By: LJA Date: 01/29/04

APPROVED: Joseph Schenk 24039
CITY ENGINEER RCE

STANDARD ROLLED CURB

Std. Dwg. No.
205
Sheet 1 of 1

CITY of NORCO STANDARD DRAWING

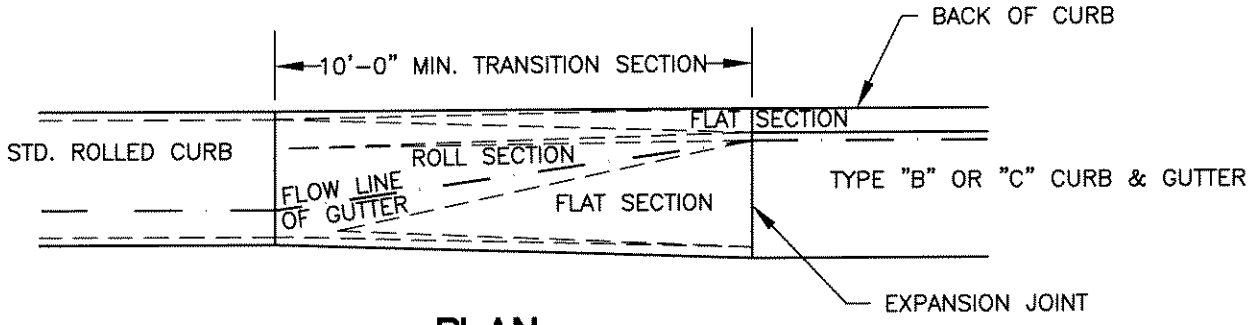

PLAN

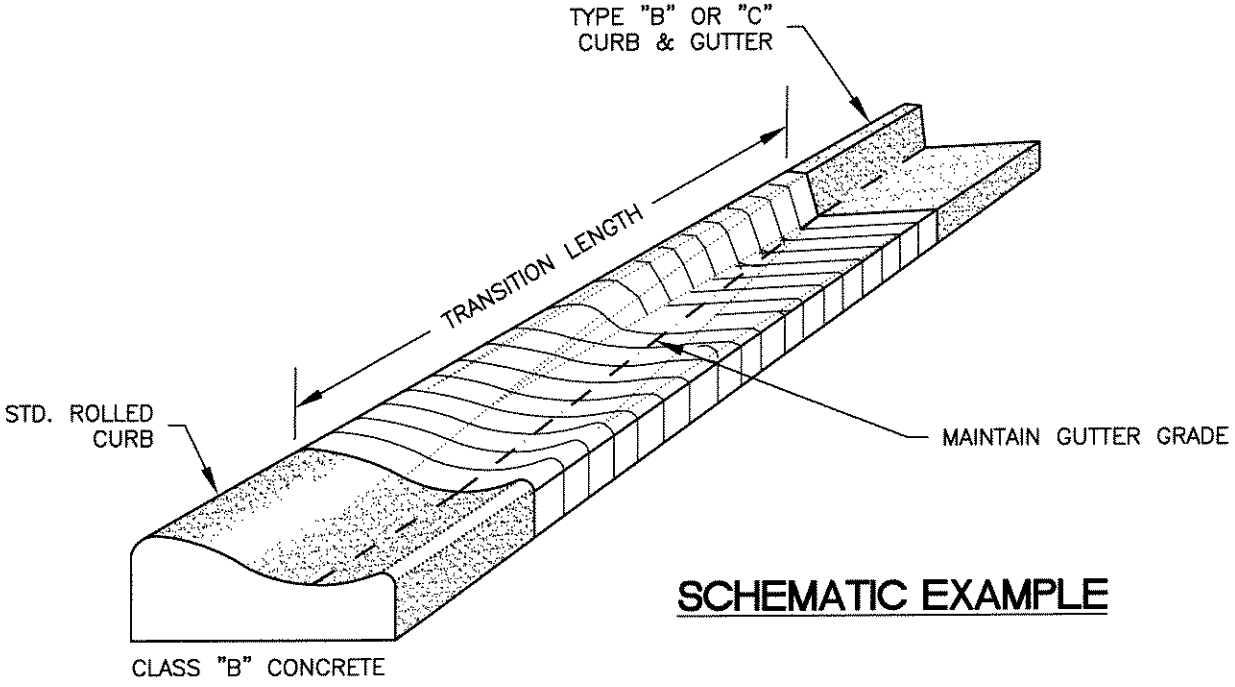

SCHEMATIC EXAMPLE

NOTES

1. TRANSITION TO BE USED ONLY WHEN STD. 205 HAS BEEN APPROVED FOR USE BY THE CITY ENGINEER PRIOR TO DESIGN.

REVISION	NO:	BY:	DATE:	NO:	BY:	DATE:

Drawn By: LJA Date: 03/19/04

APPROVED: Joseph Schenk 24039
CITY ENGINEER RCE

CURB TRANSITION

Std. Dwg. No. 215
Sheet 1 of 1

CITY of NORCO STANDARD DRAWING

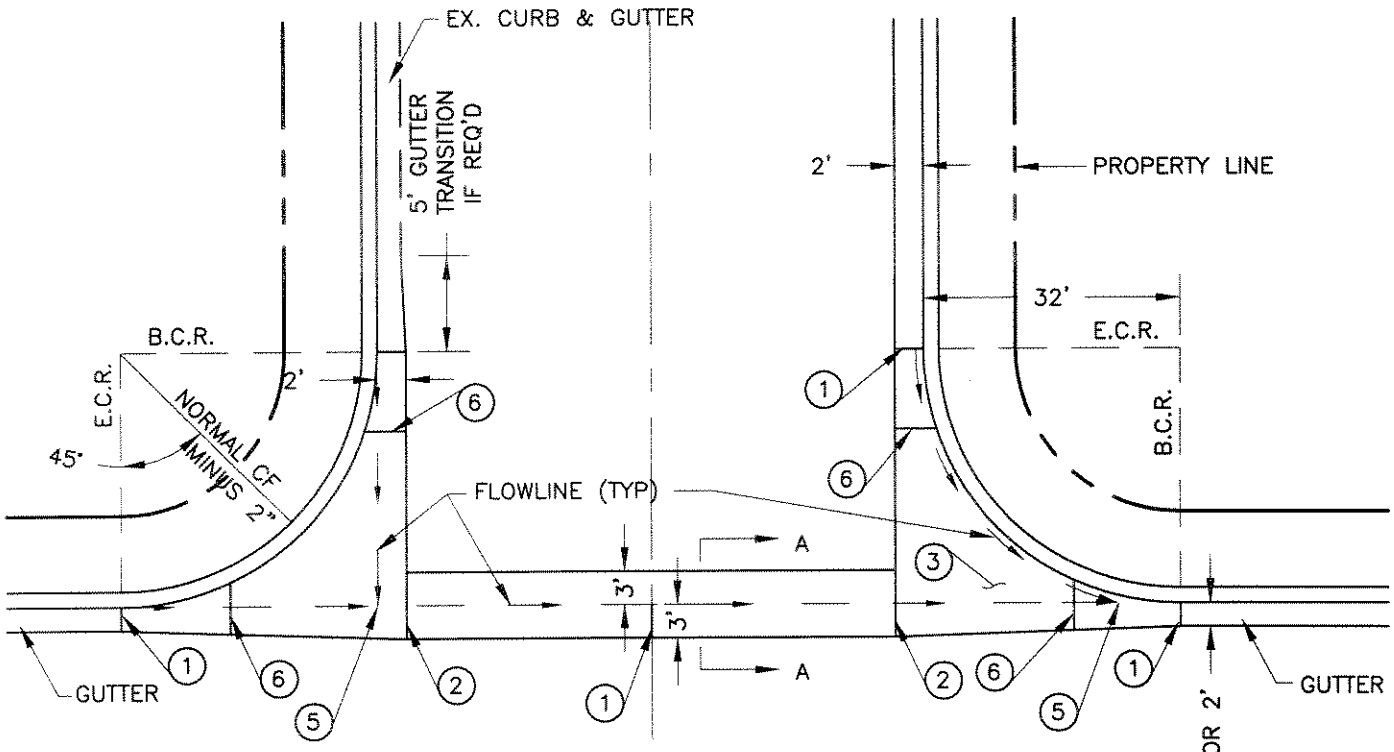

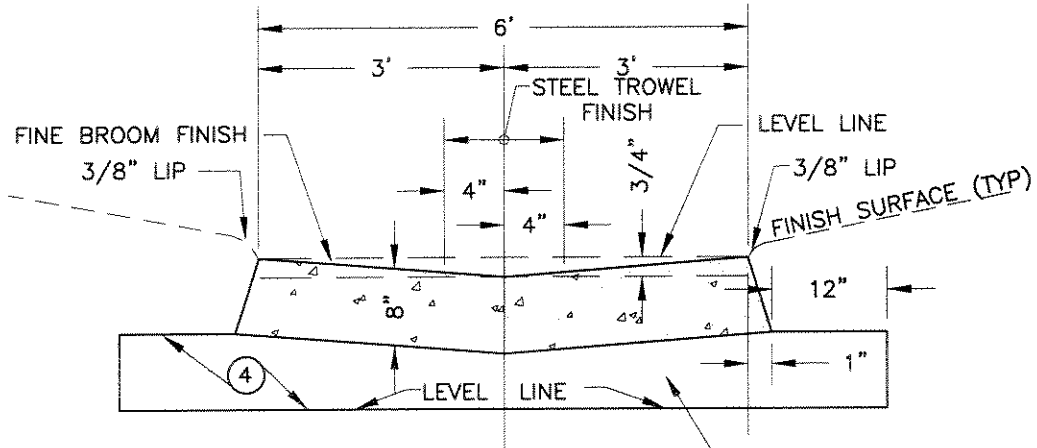

SECTION A-A

NOTES:

1. 1/2" EXPANSION JOINT (TYPICAL)
2. COLD JOINT
3. 8" CONCRETE (PER GREENBOOK, SECTION 201-1, MOST CURRENT EDITION), CURED WITH WHITE PIGMENTED COMPOUND
4. BASE SHALL EXTEND A MIN. OF 12" OUTSIDE AREA ENCLOSED BY CURB RETURN, SPANDREL AND CROSS GUTTER
5. ALL FLOWLINE P.I.'S SHALL BE LOCATED BY SURVEY & GRADE-STAKED PRIOIR TO PLACING OF CONCRETE
6. WEAKENED PLANE JOINT (MIN. DEPTH 1.5")

REVISION	NO:	BY:	DATE:	NO:	BY:	DATE:

Drawn By: LJA Date: 12/29/04

12/29/04
APPROVED: Joseph S. Schenk 24039
CITY ENGINEER RCE

CROSS GUTTER and SPANDREL

Std. Dwg. No. 225
Sheet 1 of 1

CITY of NORCO STANDARD DRAWING

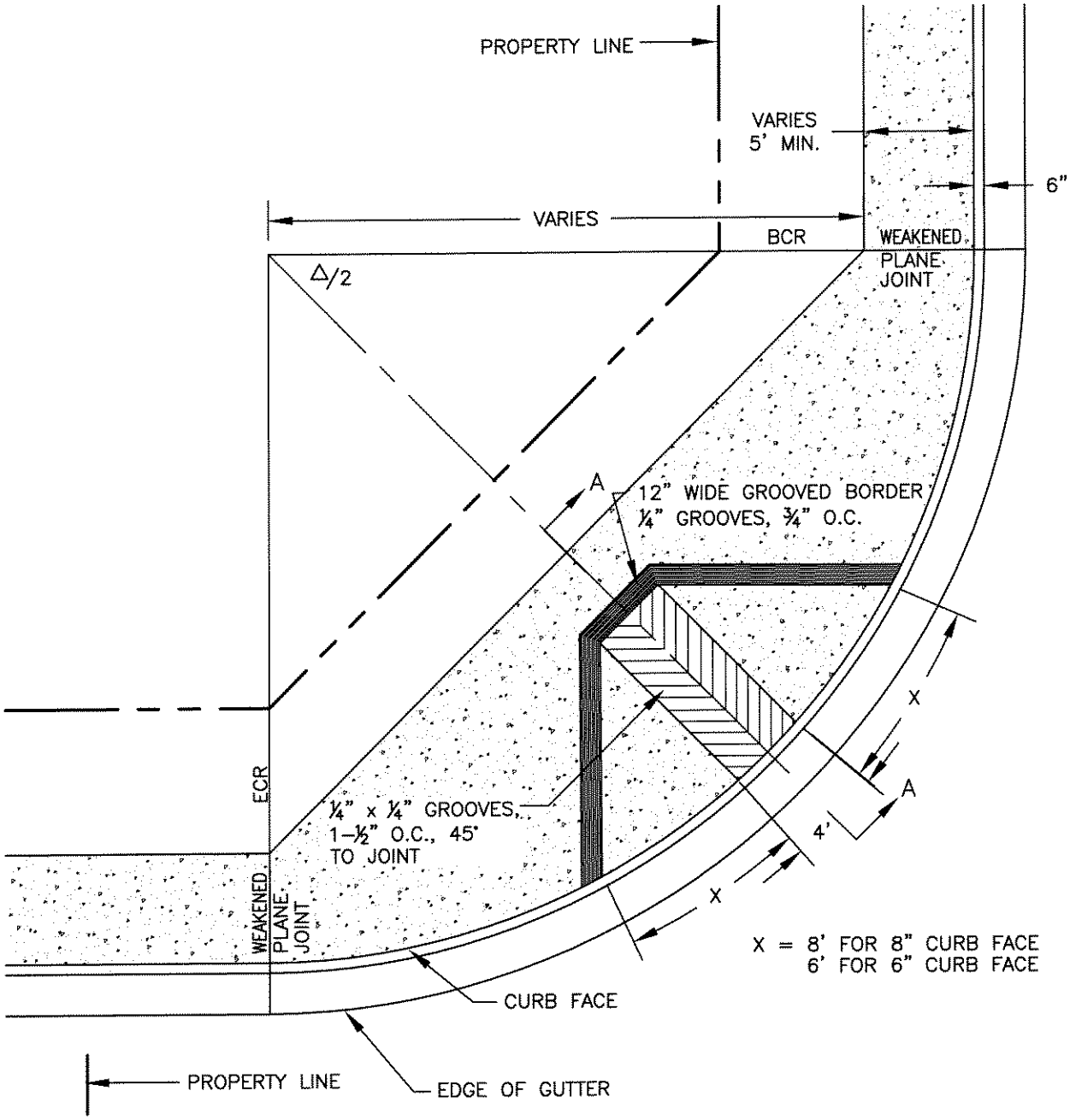

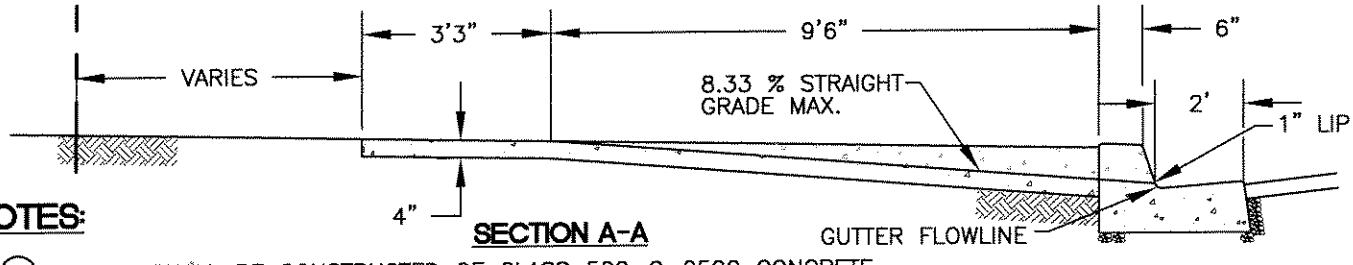

SECTION A-A

NOTES:

1. RAMPS SHALL BE CONSTRUCTED OF CLASS 520–C–2500 CONCRETE.

REVISION	NO:	BY:	DATE:	NO:	BY:	DATE:

Drawn By: LJA

Date: 03/19/04

APPROVED: Joseph Schenk 24039
CITY ENGINEER RCE

RAMP FOR THE PHYSICALLY DISABLED

Std. Dwg. No.
235
Sheet 1 of 1

CITY of NORCO STANDARD DRAWING

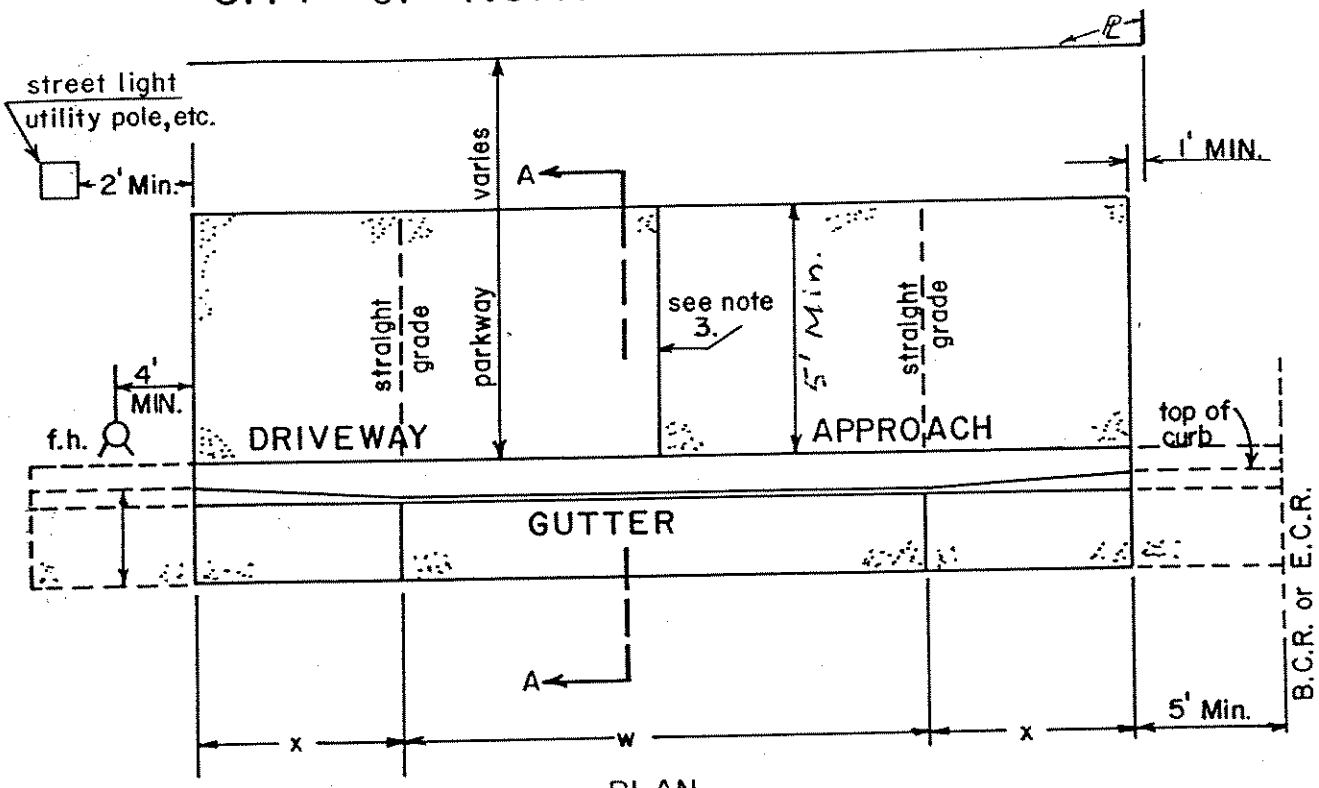

PLAN

	6" c.f.	8" c.f.	over 8" c.f.
X=	3'	4'	5'

	MIN	MAX
W=	10'	30'

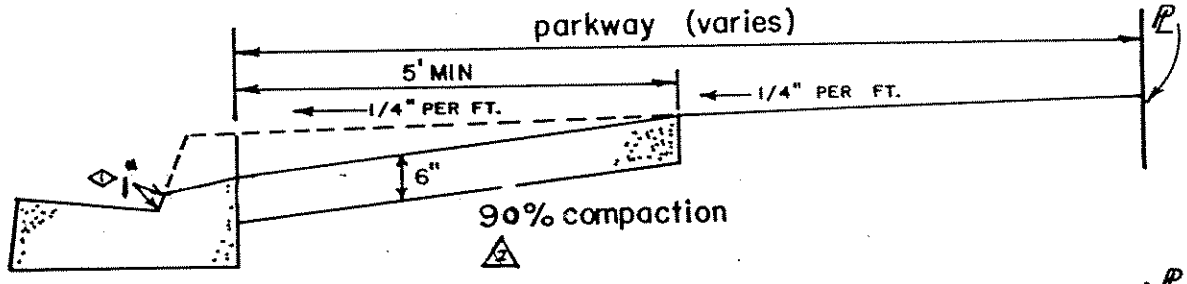

SECTION A-A
8" curb face

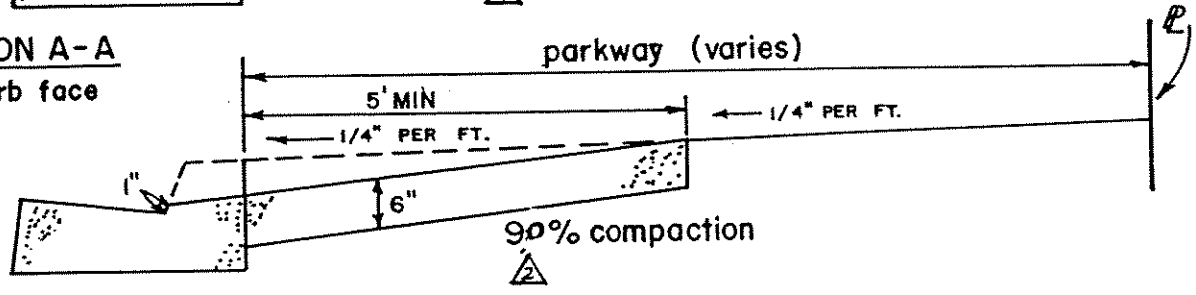

SECTION A-A
6" curb face

NOTES

1. ALL CONCRETE SHALL BE CLASS 5.5C 2500, CURED WITH WHITE PIGMENTED COMPOUND.
2. ALL EXISTING P.C.C. SHALL BE SAWCUT IF REMOVED.
3. WEAKENED PLANE JOINT REQUIRED FOR ("W") EXCEEDING 14 FEET.

NO.	BY	DATE	REVISIONS
1	N.A.	7-22-88	
2	N.A.	4-24-89	

Drawn By: E.W. Date: 10-22-85 APPROVED: Jim Ackerman CITY ENGINEER

RESIDENTIAL DRIVEWAY APPROACH

STD. DWG. NO. 240

CITY of NORCO STANDARD DRAWING

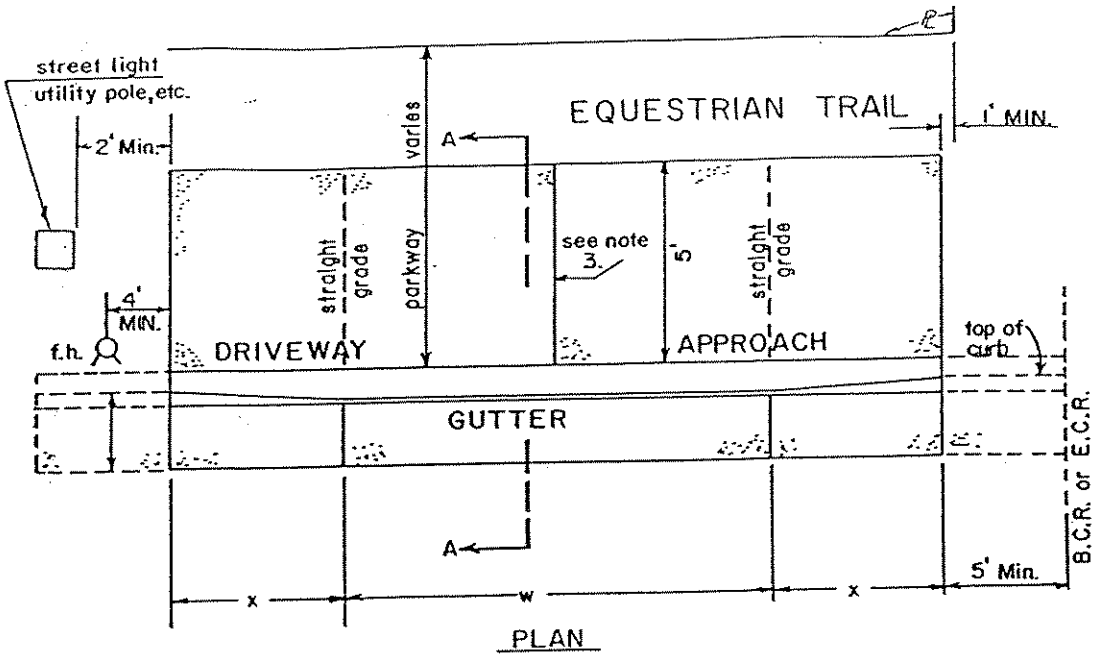

PLAN

	6" c.f.	8" c.f.	over 8" c.f.
X=	3'	4'	5'

	MIN	MAX
W=	10'	30'

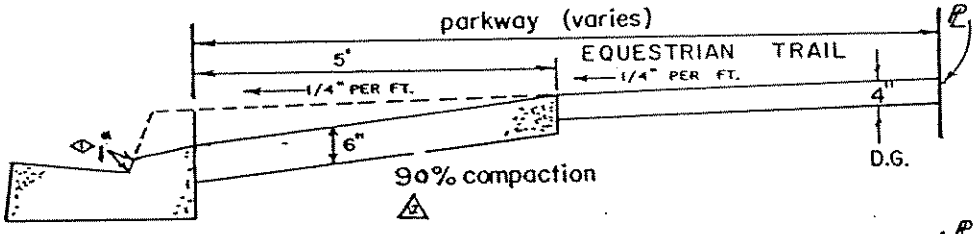

SECTION A-A
8" curb face

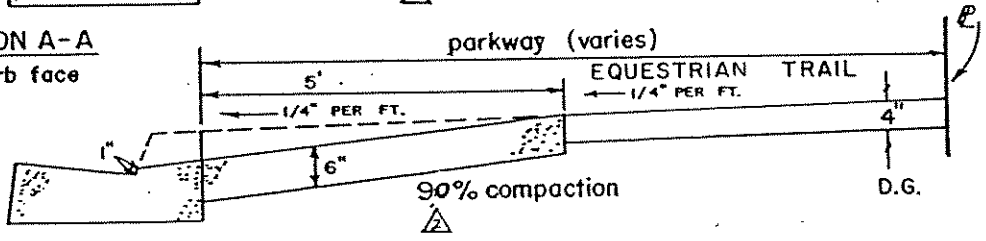

SECTION A-A
6" curb face

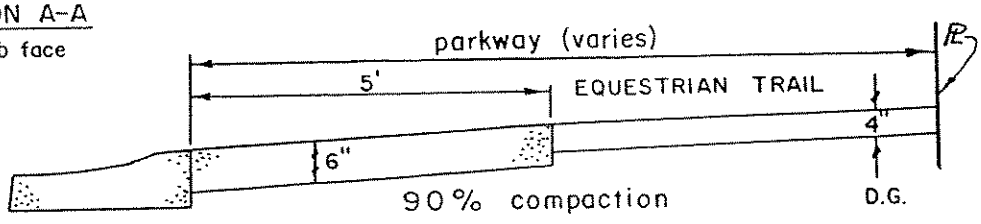

SECTION A-A
rolled curb

NOTES

1. ALL CONCRETE SHALL BE CLASS 5.5C 2500, CURED WITH WHITE PIGMENTED COMPOUND.
2. ALL EXISTING P.C.C. SHALL BE SAWCUT IF REMOVED.
3. WEAKENED PLANE JOINT REQUIRED FOR ("W") EXCEEDING 14 FEET.

Drawn By: Date: 5/12/92 APPROVED: CITY ENGINEER RCE 9399

STD. DWG. NO. 245

RESIDENTIAL DRIVEWAY APPROACH W\EQUESTRIAN TRAIL

NO.	BY	DATE

REVISIONS

CITY of NORCO STANDARD DRAWING

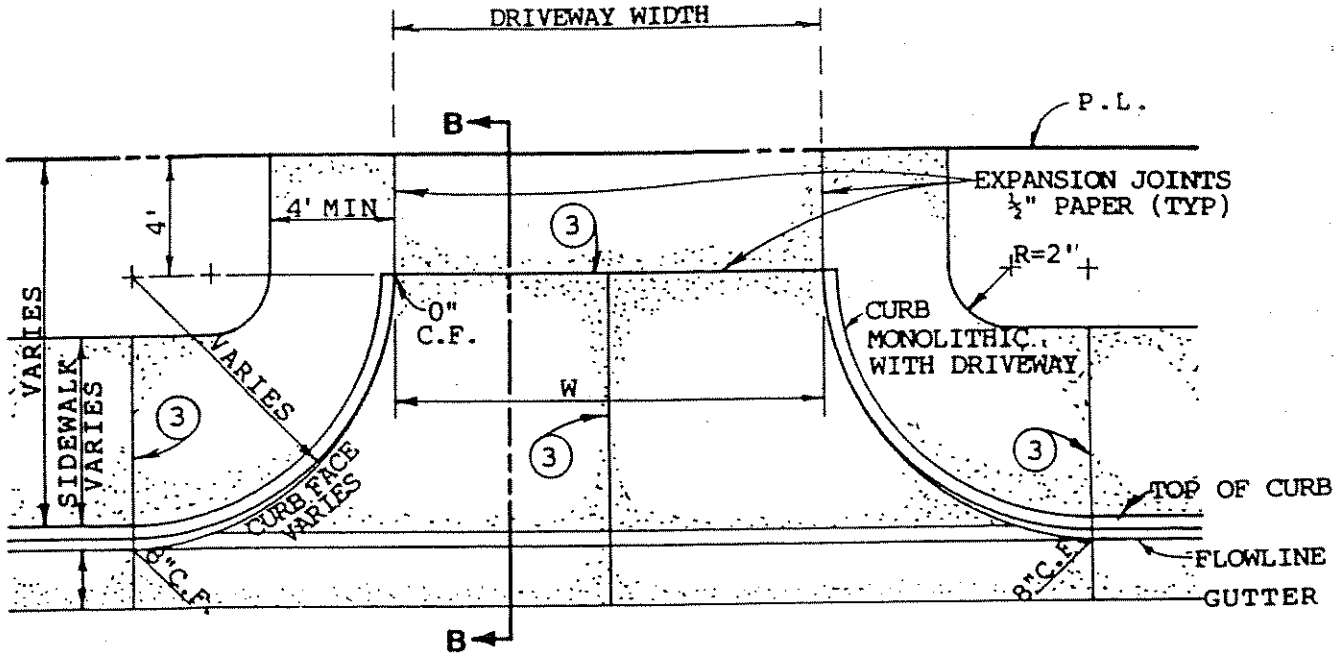

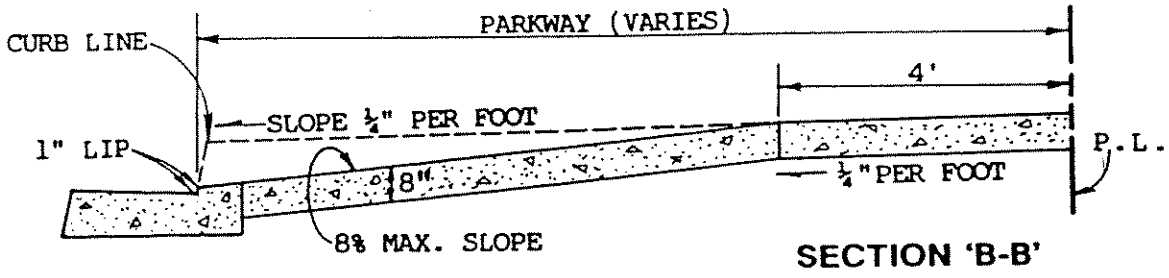

SECTION 'B-B'

95% COMPACTION

*Not to exceed 50% of the individual lot frontage.

	MIN	MAX*
W	30'	40'

NOTES:

1. All existing P.C.C. to be removed shall be sawcut at the join.
2. All concrete shall be Class 520-C-2500, cured with white pigmented compound.
3. Weakened plane joint.
4. This driveway approach may be required by the City Engineer on commercial developments.

NO.	BY	DATE	NO.	BY	DATE	NO.	BY	DATE	NO.	BY	DATE

REVISIONS

Drawn By: Date: 5/12/92 APPROVED: CITY ENGINEER RCE 9399

COMMERCIAL & INDUSTRIAL DRIVEWAY APPROACH

STD. DWG. NO 250

CITY of NORCO STANDARD DRAWING

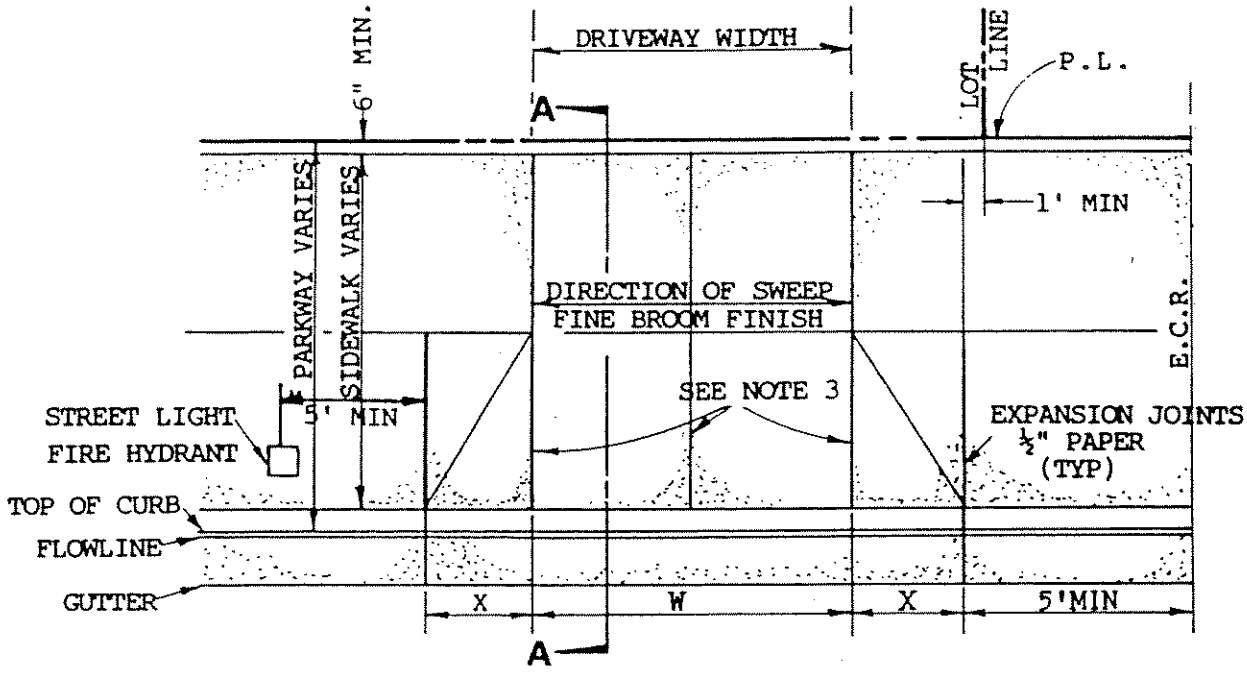

X	6"C.F	8"C.F	OVER 8"
	3'	4'	5'

W	MIN	MAX*
	20'	30'

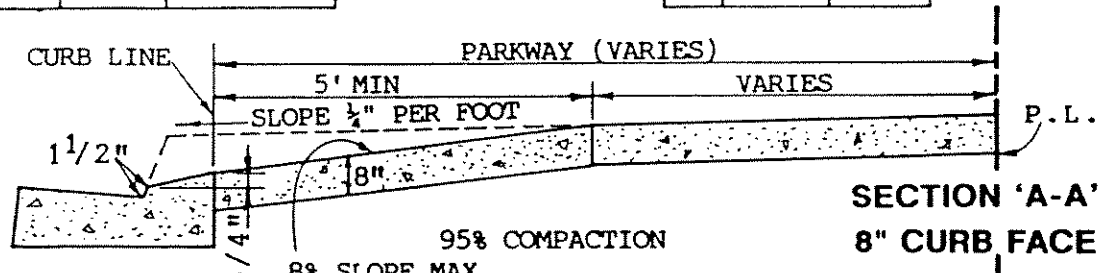

SECTION 'A-A'
8" CURB FACE

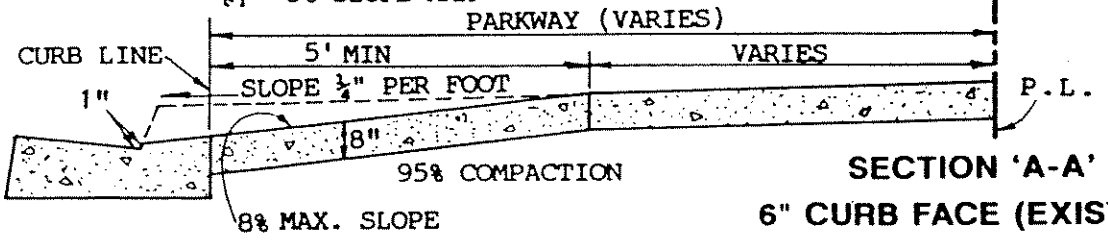

SECTION 'A-A'
6" CURB FACE (EXISTING)

*Not to exceed 50% of the individual lot frontage.

NOTES:

1. All existing P.C.C. to be removed shall be sawcut at the join.
2. All concrete shall be Class 520-C-2500, cured with white pigmented compound.
3. Weakened plane joint.

Drawn By: Date: 5/12/92 APPROVED: CITY ENGINEER RCE 9399

COMMERCIAL DRIVEWAY APPROACH (ALTERNATE)

STD. DWG. NO. 255

REVISIONS

NO.	BY	DATE

300
DRAINAGE
STANDARDS

CITY of NORCO STANDARD DRAWING

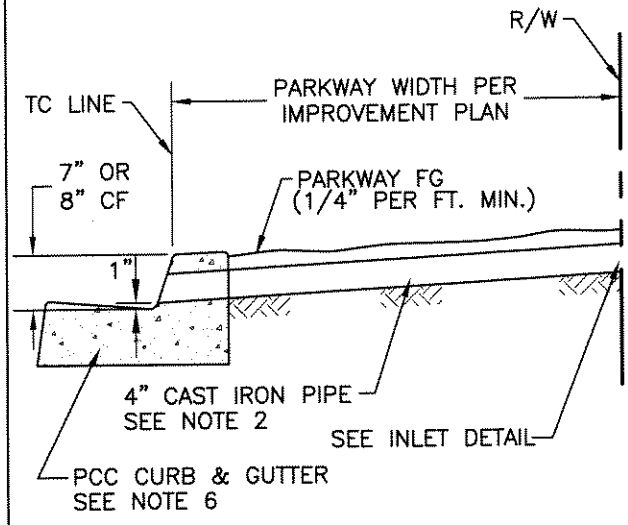

SECTION A–A

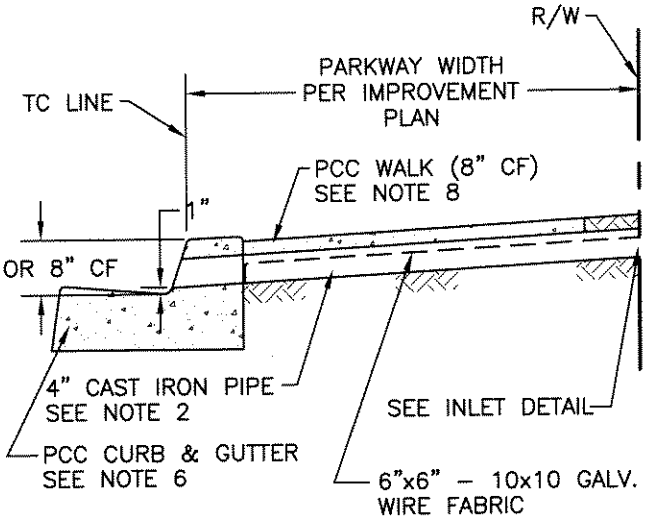

SECTION B–B

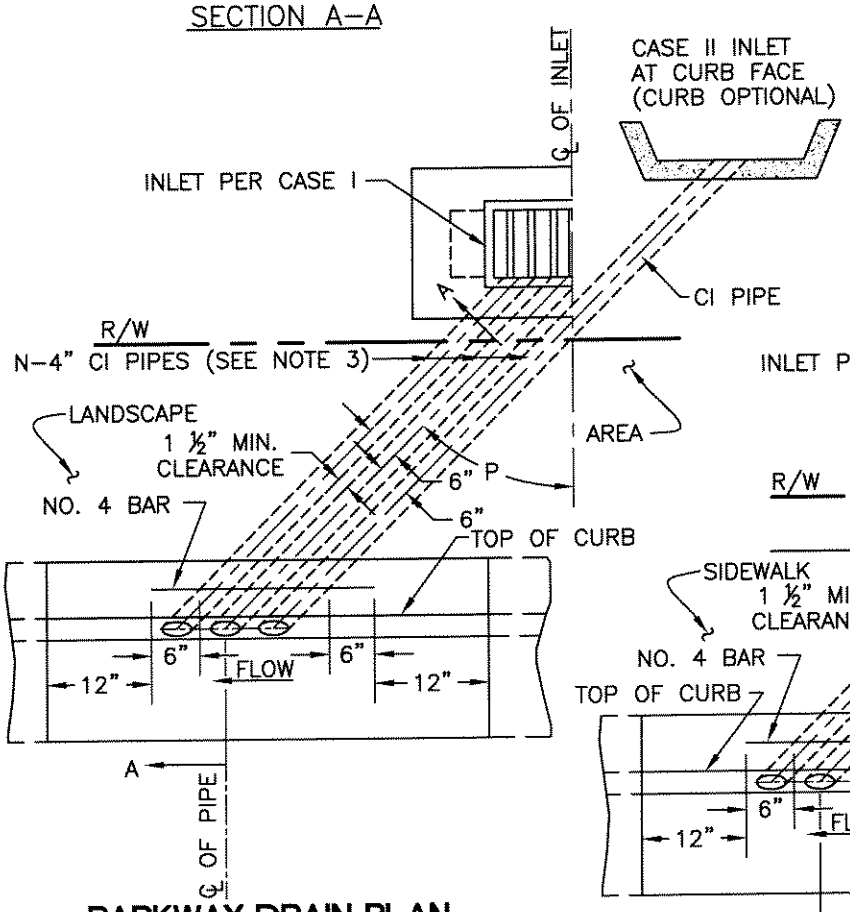

PARKWAY DRAIN PLAN

ALTERNATE 1 (NO SIDEWALK)

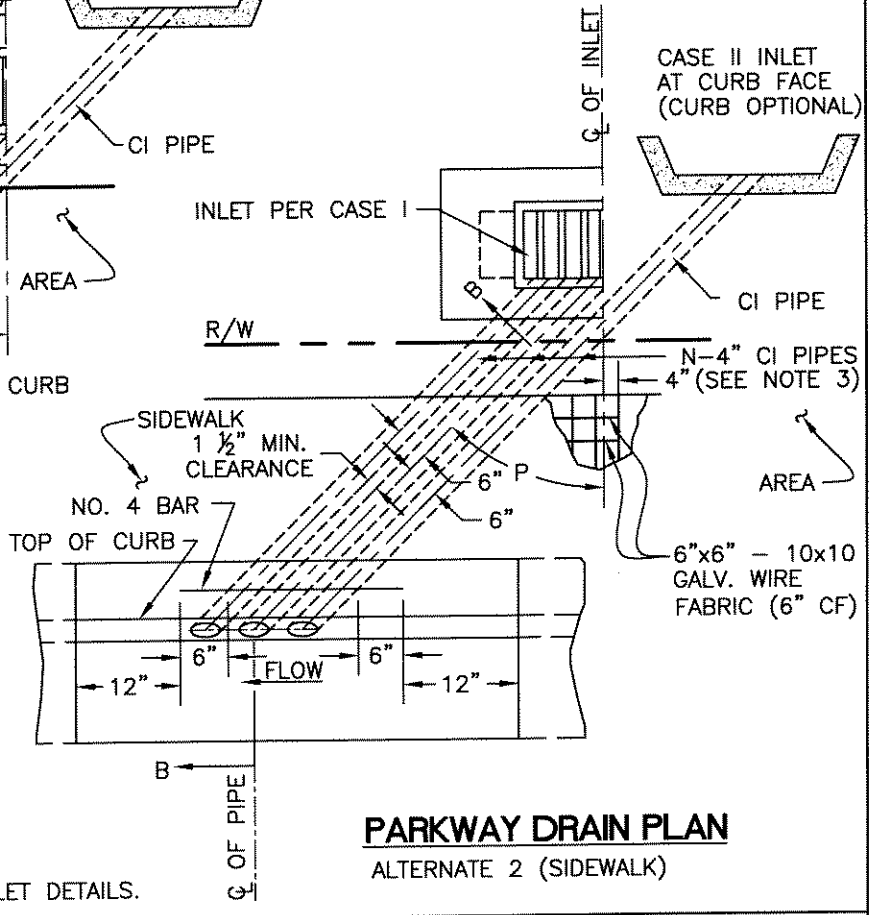

PARKWAY DRAIN PLAN

ALTERNATE 2 (SIDEWALK)

NOTE:
SEE STD. DWG NO. 300B FOR NOTES AND INLET DETAILS.

REVISION	NO:	BY:	DATE:	NO:	BY:	DATE:

Drawn By: LJA Date: 03/19/04

APPROVED: Joseph Schenk 24039
CITY ENGINEER RCE

PARKWAY DRAIN

Std. Dwg. No. **300A**
Sheet 1 of 1

CITY of NORCO STANDARD DRAWING

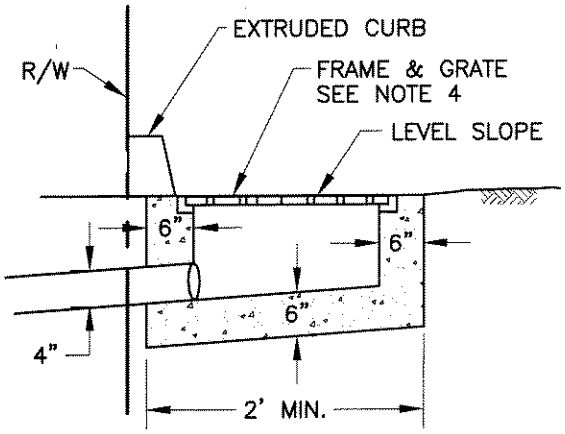

CASE I INLET
DROP INLET CATCH BASIN SECTION

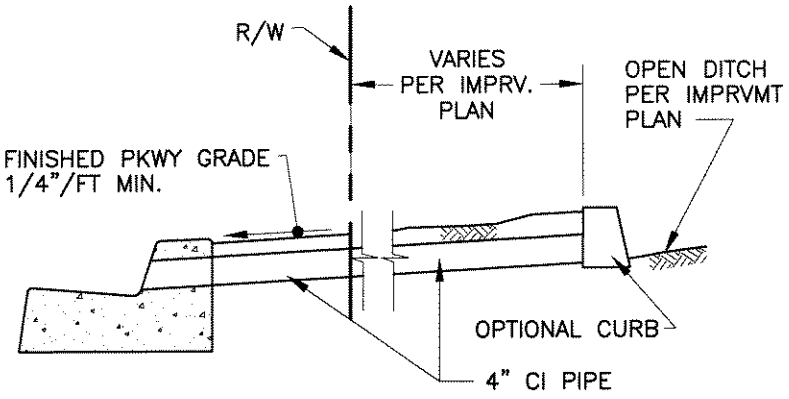

CASE II INLET
OPEN DITCH

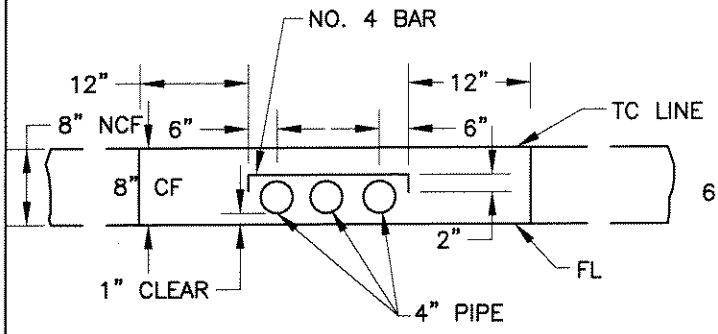

NOTE: APPLIES TO ANY NUMBER OF PIPES.

CURB PROFILE
8" NORMAL CURB FACE

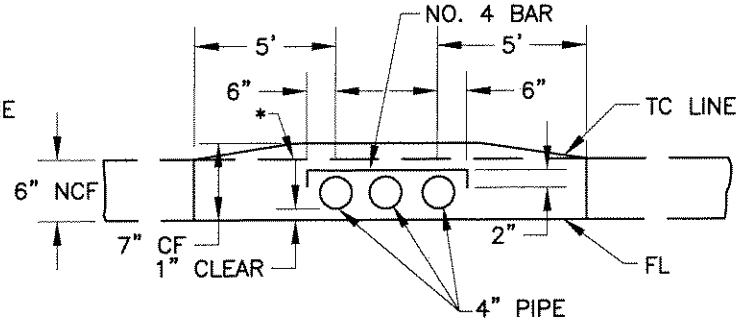

*NORMAL TC GRADE LINE AS SHOWN ON PROFILE.
NOTE: APPLIES TO ANY NUMBER OF PIPES.

CURB PROFILE
6" NORMAL CURB FACE

1. AS AN OPTION PVC SCH. 80 MAY BE USED IN LIEU OF CAST IRON.
2. CAST IRON PIPE SHALL COMPLY WITH AWWA C106, PER STANDARD SPECIFICATIONS.
3. "N" EQUALS NUMBER OF PIPES (MAX. OF 6) AS SPECIFIED ON PLAN.
4. UNLESS OTHERWISE SPECIFIED FRAME AND GRATE FOR INLET CASE I SHALL BE 14" x 24" CAST IRON PER ALHAMBRA FOUNDRY CO., TYPE A-2422 OR APPROVED EQUAL.
5. ANGLE "P" SHALL BE 45° UNLESS OTHERWISE SPECIFIED.
6. TYPE, DIMENSIONS AND ELEVATIONS OF PCC CURB AND GUTTER PER IMPROVEMENT PLAN.
7. INLET CASE TO BE SPECIFIED ON IMPROVEMENT PLAN.
8. CONSTRUCT PCC WALK WHEN SPECIFIED ON PLAN.

REVISION	NO:	BY:	DATE:	NO:	BY:	DATE:

Drawn By: LJA Date: 04/19/04

APPROVED: Joseph S. Schenk 24039
CITY ENGINEER RCE

PARKWAY DRAIN

Std. Dwg. No.
300B
Sheet 1 of 1

CITY of NORCO STANDARD DRAWING

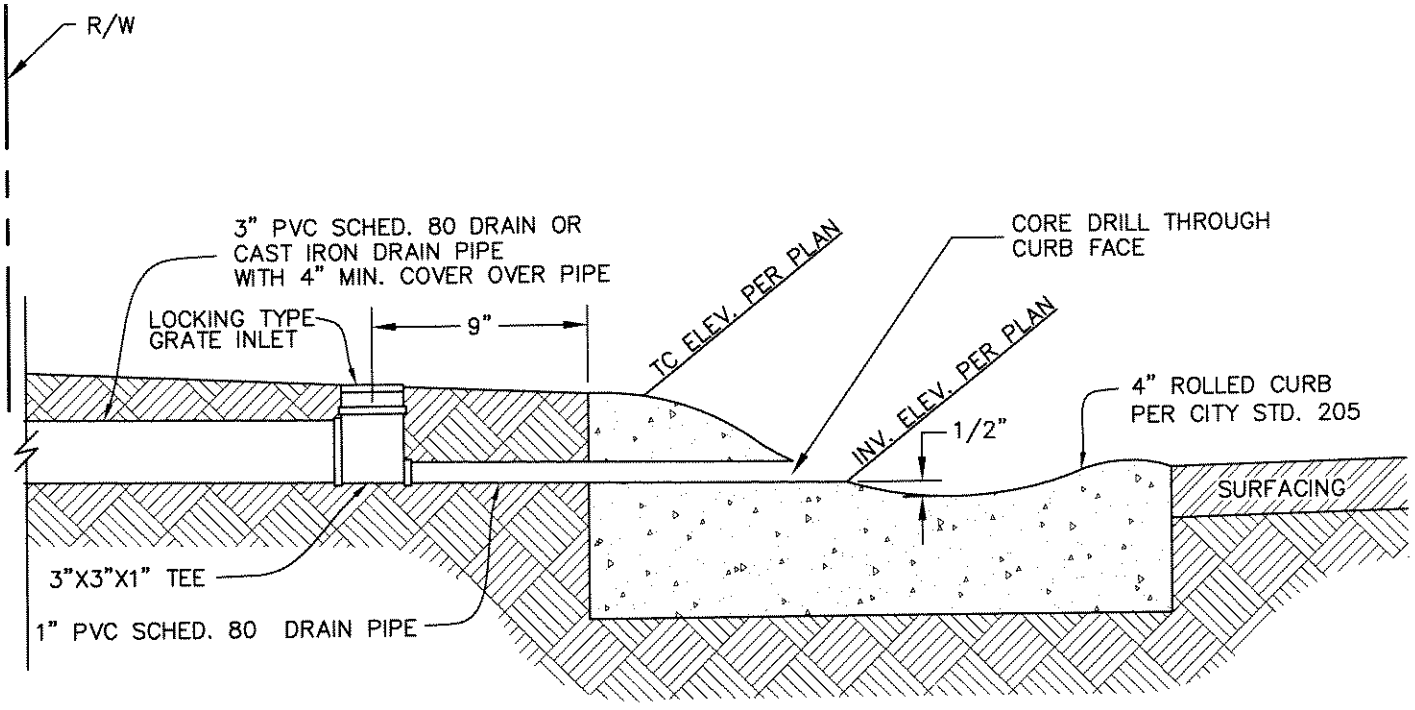

REVISION	NO:	BY:	DATE:	NO:	BY:	DATE:

Drawn By: LJA

Date: 03/19/04

APPROVED: Joseph Schenk 24039
CITY ENGINEER RCE

CURB OUTLET FOR RESIDENTIAL ROLLED CURB

Std. Dwg. No.
301
Sheet 1 of 1

400
WATER
STANDARDS

CITY of NORCO STANDARD DRAWING

WATER AND SEWER MAINS SHALL BE INSTALLED IN SEPARATE TRENCHES WHENEVER POSSIBLE. WATER MAINS SHALL BE INSTALLED AT LEAST 10 FEET HORIZONTALLY FROM, AND 1 FOOT ABOVE SANITARY SEWERS WHEN PARALLEL TO THE SEWER MAIN AND 1 FOOT HIGHER THAN SANITARY SEWERS WHEN CROSSING THE SEWER MAIN.

PARALLEL CONSTRUCTION

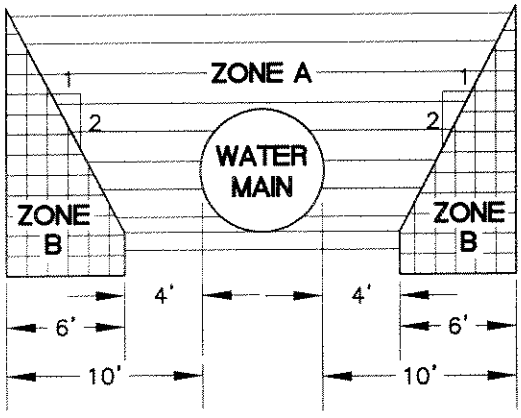

PERPENDICULAR CONSTRUCTION

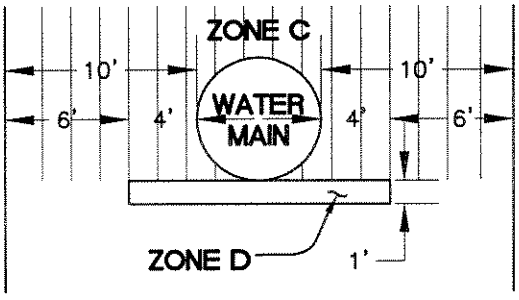

NOTE:
1. DIMENSIONS ARE FROM OUTSIDE OF WATER MAIN TO OUTSIDE OF SEWER.

SANITARY SEWERS ARE NOT PERMITTED WITHIN ANY OF THE ABOVE INDICATED ZONES UNLESS CONSTRUCTED IN CONFORMANCE WITH THE SPECIAL REQUIREMENTS AS SHOWN BELOW.

ZONE	SPECIAL SEWER CONSTRUCTION REQUIREMENTS
A	SEWER LINES WILL NOT BE PERMITTED IN THIS ZONE WITHOUT SPECIAL PERMISSION FROM STATE OF CALIFORNIA, DEPARTMENT OF HEALTH SERVICES.
B	EXTRA-STRENGTH VITRIFIED CLAY PIPE WITH COMPRESSION JOINTS; OR CONCRETE PIPE WITH REINFORCED CONCRETE COLLARS AROUND THE JOINTS, WHICH JOINTS SHALL HAVE A MINIMUM THICKNESS OF SIX INCHES AND A MINIMUM DISTANCE ALONG THE PIPE OF SIX INCHES ON EITHER SIDE OF THE JOINT; OR RUBBER GASKET REINFORCED CONCRETE PIPE; OR RUBBER GASKETED ASBESTOS CEMENT PIPE; OR RUBBER GASKETED PLASTIC PIPE; OR CAST IRON PIPE WITH COMPRESSION JOINTS.
C OR D	CLASS 150 OR HEAVIER CAST IRON PIPE WITH HOT DIP BITUMINOUS COATING AND COMPRESSION JOINTS; OR ANY SEWER PIPE WITHIN A CONTINUOUS STEEL CASING, WHICH CASING SHALL HAVE A THICKNESS OF NOT LESS THAN ONE-FOURTH INCH AND WITH ALL VOIDS BETWEEN SEWER PIPE AND CASING PRESSURE GROUTED WITH SAND CEMENT GROUT.

REVISION NO:	BY:	DATE:	NO:	BY:	DATE:

12/15/04

APPROVED: Joseph L. Schenk 24039
CITY ENGINEER RCE

Drawn By: LJA Date: 3/19/04

SEPARATION OF SEWER AND WATER

Std. Dwg. No. 400A
Sheet 1 of 1

CITY of NORCO STANDARD DRAWING

THE SPECIAL CONSTRUCTION REQUIREMENTS SHALL APPLY TO HOUSE LATERALS THAT CROSS ABOVE A PRESSURE WATER MAIN BUT NOT TO THOSE HOUSE LATERALS THAT CROSS BELOW A PRESSURE WATER MIAN.

1. SEWER FORCE MAINS ARE NOT PERMITTED TO BE CONSTRUCTED OVER WATER MAINS. FORCE MAINS MUST HAVE THE REQUIRED 10' SEPARATION REGARDLESS OF CONSTRUCTION. WHEN SEWER FORCE MAINS MUST CROSS UNDER WATER MAINS, SPECIAL APPROVAL OF THE HEALTH DEPARTMENT IS REQUIRED IN ADVANCE.

2. CONSTRUCTION OF ANY SANITARY SEWERS WITHIN 25' HORIZONTAL DISTANCE OF LOW HEAD WATER MAINS SHALL BE REVIEWED AND APPROVED BY THE HEALTH DEPARTMENT IN ADVANCE. (LOW HEAD WATER MAINS ARE DEFINED IN THE STATE HEALTH DEPARTMENT POLICY AS ANY WATER MAIN WHICH HAS LESS THAN 5 PSI AT ANY TIME AT ANY POINT IN THE MAIN.)

3. WHERE A SEWER MUST CROSS OVER A WATER MIAN; IT SHOULD CROSS AT A 90 DEGREE ANGLE IF POSSIBLE AND THE LENGTH OF SEWER PIPE SHALL BE CENTERED ON THE WATER MAIN SO THE SEWER JOINTS ARE THE MAXIMUM DISTANCE FROM THE WATER MAIN.

IF AN EXISTING SEWER IS LOCATED WITHIN ZONE A, B, C, OR D (SEE SHEET 400A) OF A PROPOSED WATER MAIN, THE FOLLOWING SPECIAL REQUIREMENTS APPLY:

ZONE

A. NO WATER MAINS SHALL BE CONSTRUCTED WITHOUT SPECIAL PERMISSION FROM THE DEPARTMENT OF HEALTH.

B. IF THE SEWER DOES NOT MEET ZONE B REQUIREMENTS GIVEN ABOVE, THE WATER MAIN SHALL BE CLASS 200 PIPE OR EQUIVALENT.

C. NO WATER MAINS SHALL BE CONSTRUCTED WITHOUT SPECIAL PERMISSION FROM THE DEPARTMENT OF HEALTH. IF PERMISSION IS GRANTED, THE SEWER SHALL BE ENCASED WITH REINFORCED CONCRETE AND THE WATER MAIN SHALL BE OF CLASS 200 PIPE OR EQUIVALENT.

D. THE SEWER SHALL BE ENCASED WITH REINFORCED CONCRETE.

CONCRETE SHALL BE CLASS 560-B-3250.

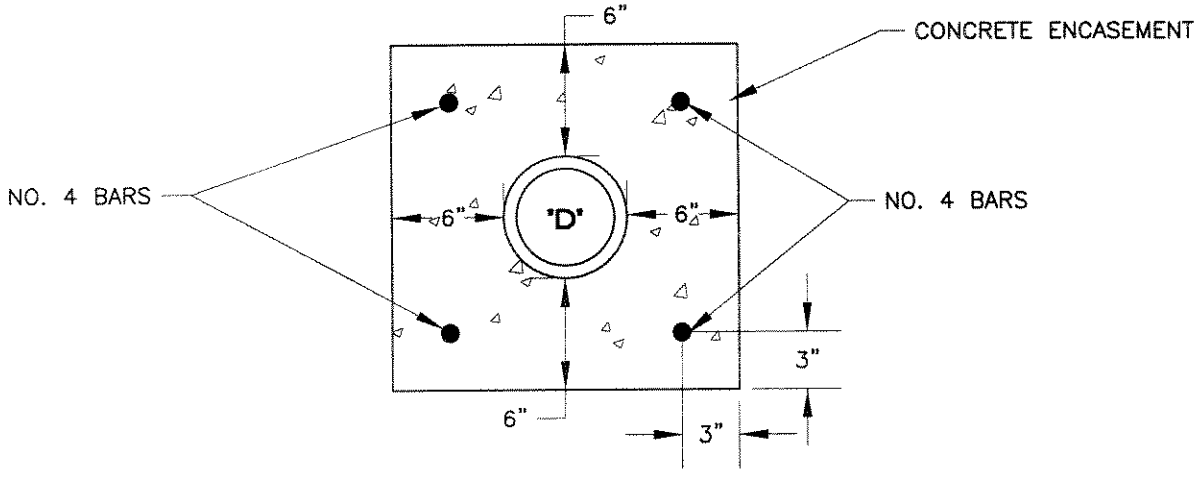

REVISION	NO:	BY:	DATE:	NO:	BY:	DATE:

12/15/04

APPROVED: Joseph S. Schenk 24039
CITY ENGINEER RCE

Drawn By: LJA Date: 3/19/04

SEPARATION OF SEWER AND WATER CONCRETE ENCASEMENT

Std. Dwg. No. 400B
Sheet 1 of 1

CITY of NORCO STANDARD DRAWING

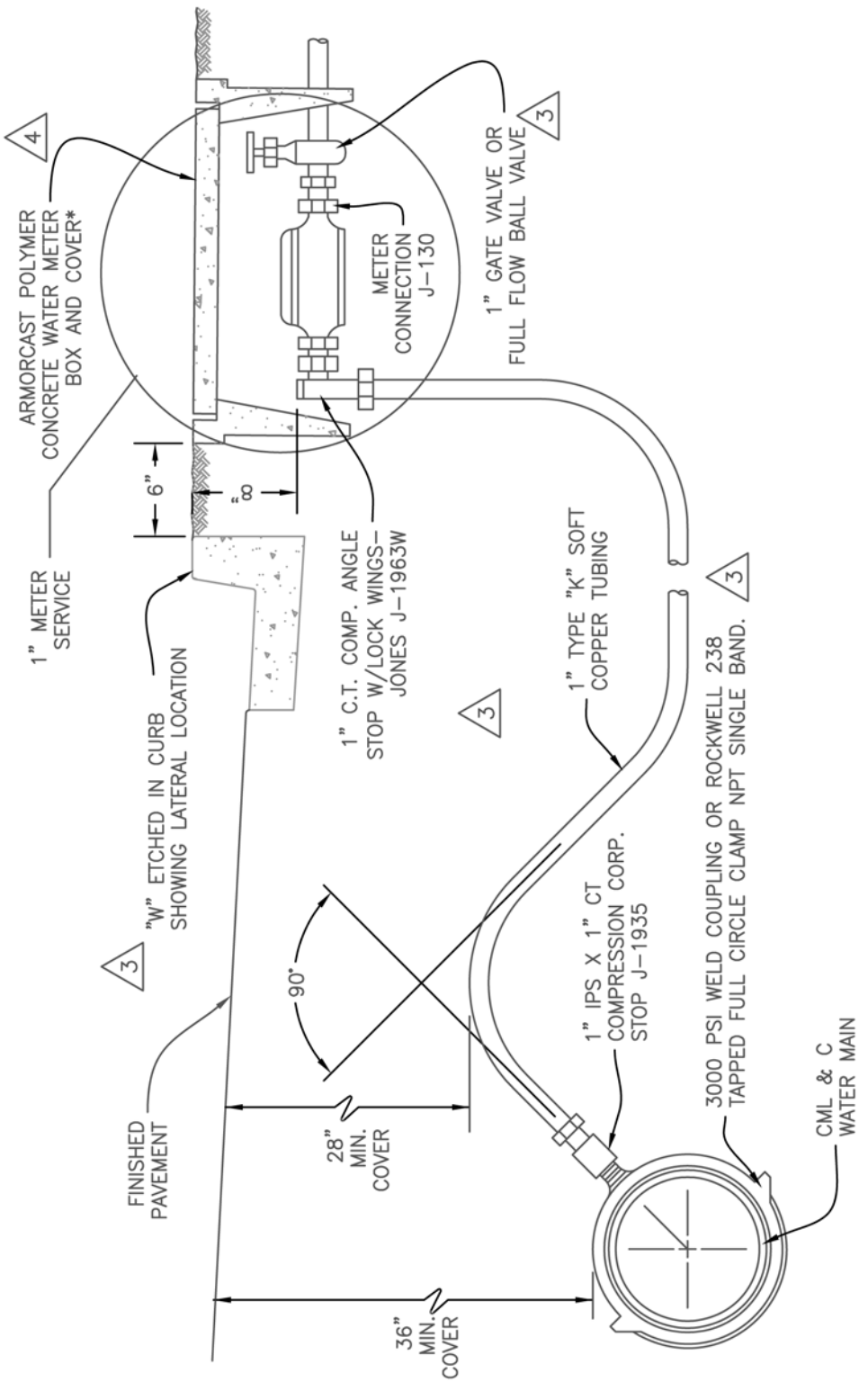

NOTES

1. ON ALL WATER MAINS THE CONTRACTOR SHALL FURNISH AND INSTALL SERVICE CONNECTIONS ON BOTH SIDES OF METER AND METERBOX, EXCEPT WHEN OTHERWISE AUTHORIZED BY THE CITY ENGINEER. ONLY THE WATER METER SHALL BE FURNISHED BY THE CITY.
2. BOTH THE SERVICE AND CONSUMER LINES SHALL BE FURNISHED AND INSTALLED BY THE CONTRACTOR PRIOR TO SIDEWALK CONSTRUCTION.
3. STRICT ADHERENCE TO SPECIAL PROVISIONS FOR TESTING AND DISINFECTING CML & C WATER LINES SHALL BE ENFORCED.
4. NO DIRECT TAPS SHALL BE MADE INTO CITY WATER MAIN. 3
5. INSTALL METER IMMEDIATELY – JUMPER NOT ALLOWED.

*POLYMER CONCRETE BOX AND COVER ASSEMBLIES SHALL BE MANUFACTURED BY ARMORCAST PRODUCTS COMPANY. FOR 1" METER USE THE FOLLOWING APC PARTS:
PART NO. A6001946PCX12 FOR 13'x24"x12" METER BOX
PART NO. A6001866-H7 FOR 13'x24"x2" COVER W/HOLE 4

REVISION	NO:	BY:	DATE:	NO:	BY:	DATE:
	1	JMA	6/9/86	3	LJA	5/02/02
	2	JS	7/21/00	4	LJA	7/18/11

Drawn By: LJA Date: 3/19/04

APPROVED: CITY ENGINEER C 27172 RCE

1" WATER SERVICE CONNECTION

Std. Dwg. No. 405

Sheet 1 of 1

CITY of NORCO STANDARD DRAWING

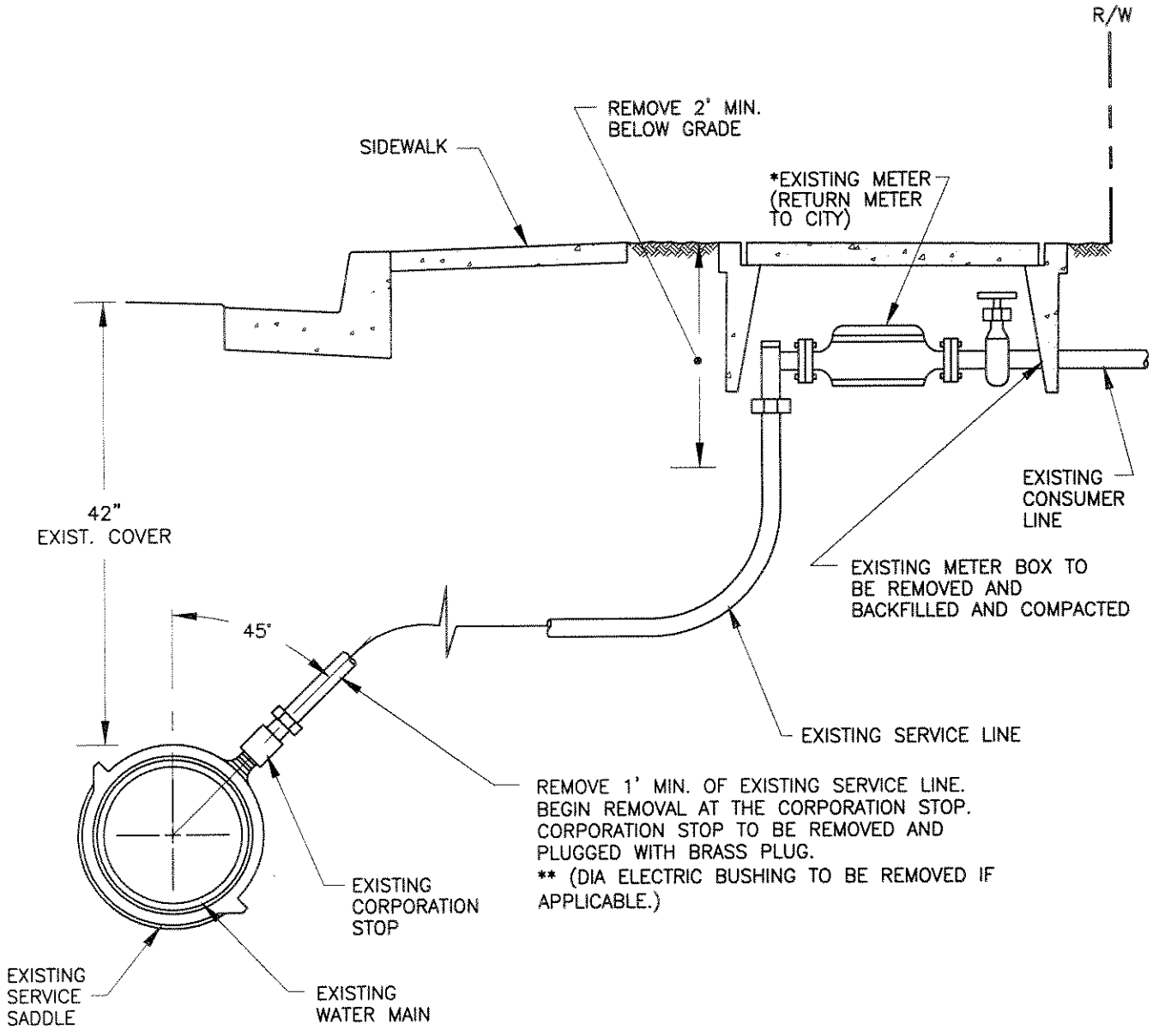

NOTES

1. ALL WATER SERVICE ABANDONMENT SHALL BE INSPECTED BY THE CITY PUBLIC WORKS INSPECTOR OR AUTHORIZED REPRESENTATIVE PRIOR TO BACKFILL AND TRENCH RESTORATION.

2. TRENCH RESTORATION PER CITY STANDARD DRAWING NO. 155.

3. PLUG COUPLING AND/OR SADDLE. COAT SADDLE WITH CEMENT PRIOR TO BACKFILL.

4. ABANDONMENT MAY REQUIRE BONDING OR RESECTIONING PER CITY.

* UTILITIES DIVISION TO BE CONTACTED FOR REMOVAL OF WATER METER. 2 DAY MIN.

** IF IN A COMMERCIAL ZONE, SHUTDOWN WILL HAVE TO START AFTER 9:00 P.M. DEPENDING ON CLOSURE OF BUSINESS.

REVISION	NO:	BY:	DATE:	NO:	BY:	DATE:
	1	JS	7/21/00			

12/15/04

APPROVED: Joseph S. Schenk 24039
CITY ENGINEER RCE

Drawn By: LJA Date: 3/19/04

WATER SERVICE ABANDONMENT

Std. Dwg. No.
406
Sheet 1 of 1

CITY of NORCO STANDARD DRAWING

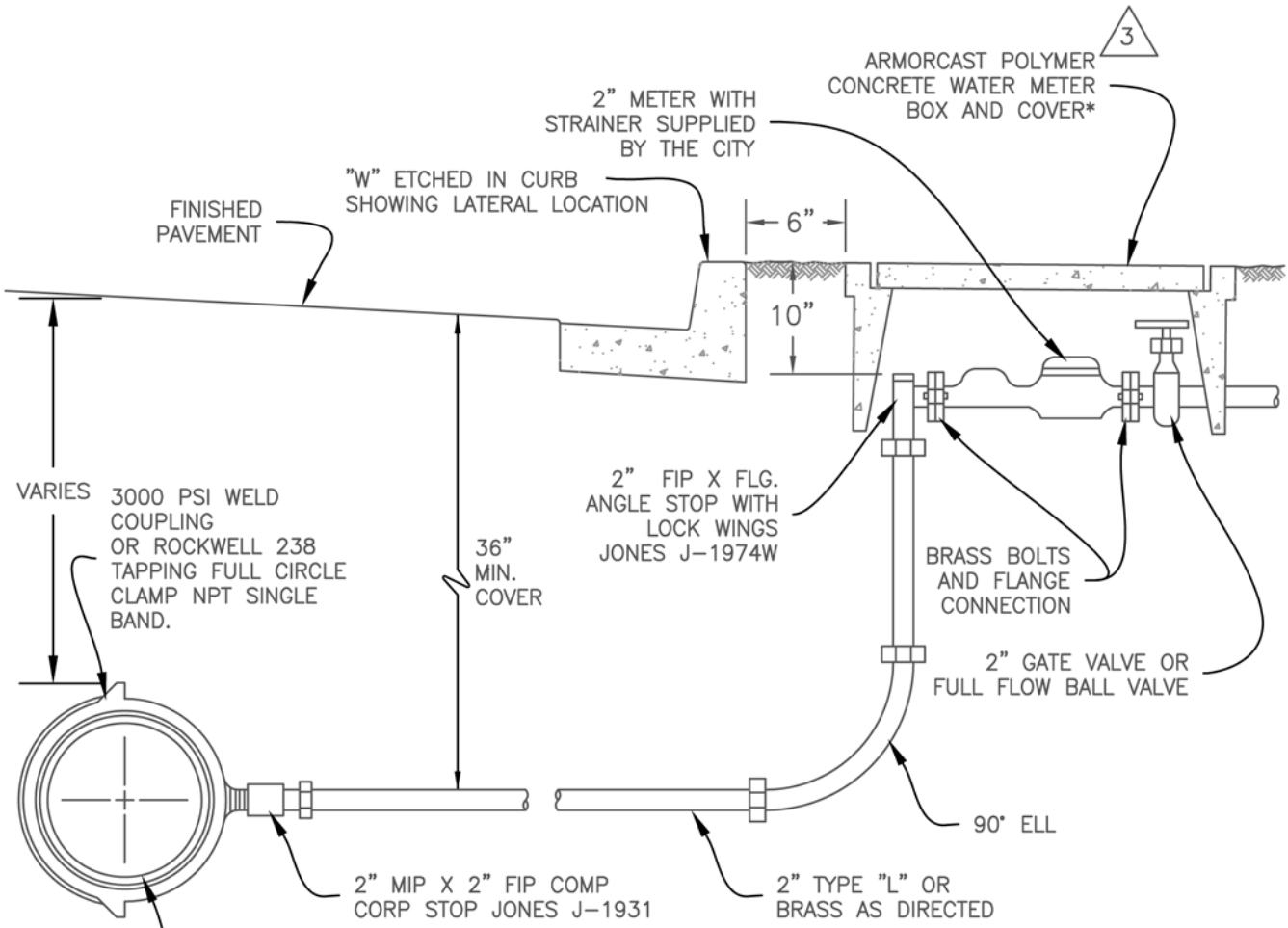

*POLYMER CONCRETE BOX AND COVER ASSEMBLIES SHALL BE MANUFACTURED BY ARMORCAST PRODUCTS COMPANY. FOR 2" METER USE THE FOLLOWING APC PARTS:
PART NO. A6001640PCX12 FOR 17"x30"x12" METER BOX
PART NO. A6001643-H7 FOR 17"x30"x2" COVER W/ HOLE

3

NOTES

1. ON ALL WATER MAINS THE CONTRACTOR SHALL FURNISH AND INSTALL SERVICE CONNECTIONS ON BOTH SIDES OF METER AND METERBOX, EXCEPT WHEN OTHERWISE AUTHORIZED BY THE CITY ENGINEER. ONLY THE WATER METER SHALL BE FURNISHED BY THE CITY.

2. BOTH THE SERVICE AND CONSUMER LINES SHALL BE FURNISHED AND INSTALLED BY THE CONTRACTOR PRIOR TO SIDEWALK CONSTRUCTION.

3. STRICT ADHERENCE TO SPECIAL PROVISIONS FOR TESTING AND DISINFECTING CML & C WATER LINES SHALL BE ENFORCED. ALL COATING TO BE REMOVED PRIOR TO INSTALLATION AND TO BE RECOATED AFTER INSTALLATION.

4. NO DIRECT TAPS SHALL BE MADE INTO CITY MAIN.

5. NO COMPRESSION FITTINGS ALLOWED BETWEEN CORPORATION STOP AND ANGLE METER STOP UNLESS AUTHORIZED BY INSPECTOR.

6. INSTALL METER IMMEDIATELY – JUMPER NOT ALLOWED.

REVISION	NO:	BY:	DATE:	NO:	BY:	DATE:
	1	JS	7/21/00	3	LJA	7/18/11
	2	JS	5/02/02			

Drawn By: LJA Date: 3/19/04

APPROVED: CITY ENGINEER C 27172 RCE

2" WATER SERVICE CONNECTION

Std. Dwg. No. 410
Sheet 1 of 1

CITY of NORCO STANDARD DRAWING

(1) SENSUS HYDRO/TURBO METER. METER CALIBRATED TO 100 CU. FT.
(2) SENSUS STRAINER
(3) SENSUS #912 ADAPTER
(4) SPOOL PIECE, (2 PIPE DIAMETERS MIN.)
(5) TEST NIPPLE AND CAP
(6) VALVE
(7) REDUCING TEE
(8) 90° ELBOW
(9) BYPASS PIPING
(10) SENSUS #411 COUPLING
(11) BYPASS VALVE
(12) SPOOL PIECE, (5 PIPE DIAMETERS MIN.)
(13) SPOOL PIECE, 36" MINIMUM
(14) WELDED FLANGE COUPLING ADAPTER
(15) CL 200, 4" MINIMUM
(16) RESILIANT WEDGE GATE VALVE UP TO 4" DIA.; BUTTERFLY VALVE 6" AND ABOVE.
(17) TAPPING SLEEVE OR TEE ON MAIN
(18) CONCRETE THRUST BLOCK PER CITY STD. NO.XXX
(19) SERVICE LINE TO CUSTOMER
(20) UTILITY VAULT, (SEE GENERAL NOTES)

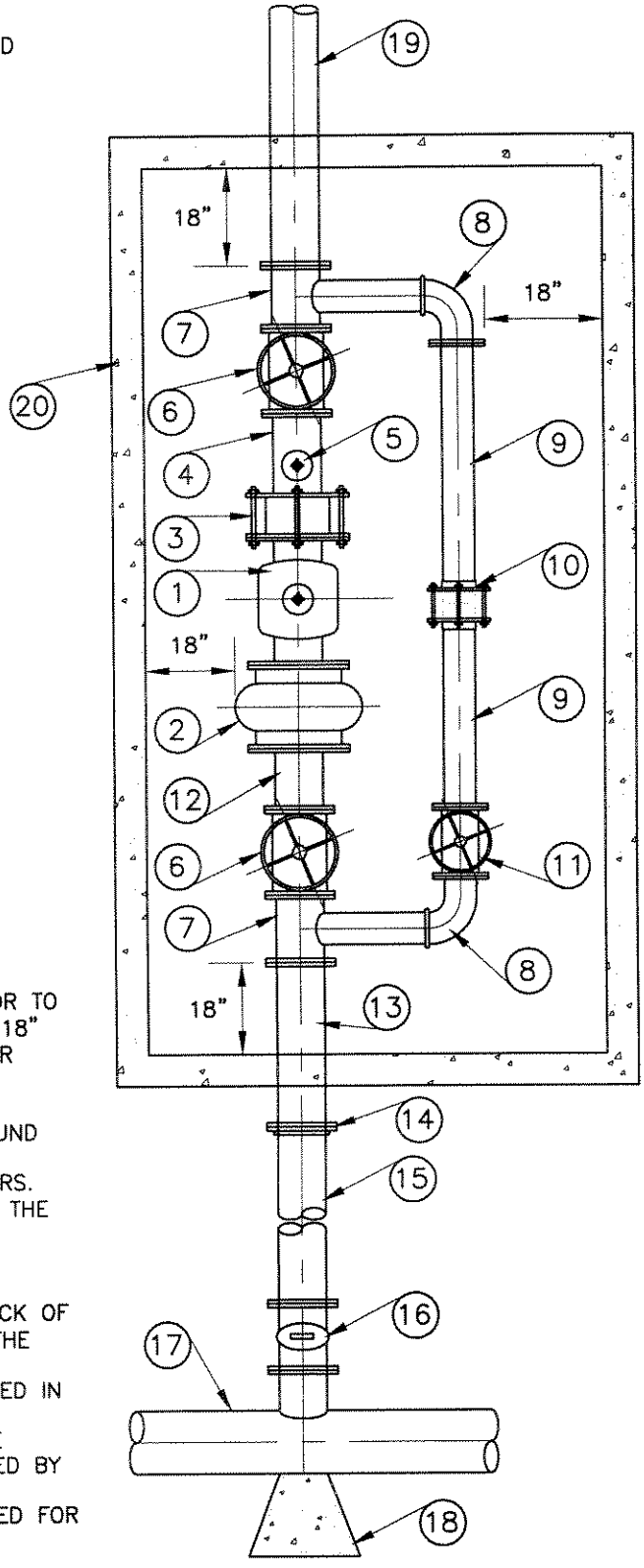

GENERAL NOTES

1. VAULTS SHALL BE BEST CONCRETE PRODUCTS, BROOKS PRODUCTS, QUICK-SET, OR EQUAL APPROVED IN WRITING PRIOR TO CONSTRUCTION. VAULTS SHALL BE FABRICATED SO THERE IS 18" HORIZONTAL CLEARANCE MINIMUM ON ALL SIDES OF THE METER ASSEMBLY.
2. ALL VAULTS SHALL HAVE TRAFFIC COVERS. NO PARKWAY COVERS WILL BE ALLOWED. COVERS SHALL HAVE A 7 ½" ROUND READING LID CENTERED OVER THE METER.
3. CONCRETE PIERS SHALL BE PLACED UNDER VAULT CORNERS.
4. 6" OF 3/4" ROCK SHALL BE PLACED IN THE BOTTOM OF THE VAULT.
5. THE METER SHALL BE SUPPORTED BY ADJUSTABLE PIPE SUPPORTS.
6. THE VAULT SHALL BE LOCATED 2' MINIMUM FROM THE BACK OF CURB, AND SHALL BE LOCATED SO THE ENTIRE VAULT IS IN THE PUBLIC RIGHT-OF-WAY.
7. WHERE BRAND NAMES ARE CALLED OUT, EQUALS, APPROVED IN WRITING PRIOR TO PLAN APPROVAL, MAY BE USED.
8. BYPASS PIPING CAN BE PURCHASED AS A ROCKWELL PRE FAB-PAC OR HYDRO PRECISION PACKAGE OR EQUAL, APPROVED BY THE CITY ENGINEER.
9. ALL FITTINGS, PIPES, VALVES, AND FLEXES SHALL BE RATED FOR 200 PSI MINIMUM.

REVISION	NO:	BY:	DATE:	NO:	BY:	DATE:

12/16/04
APPROVED: Joseph S. Schenk 24039
CITY ENGINEER RCE

Drawn By: LJA Date: 3/19/04

STANDARD WATER SERVICE 3" and LARGER

Std. Dwg. No. 415
Sheet 1 of 1

CITY of NORCO STANDARD DRAWING

NOTE:

BYPASS METER NOT REQUIRED WHEN LINE SIZE METER IS INSTALLED BEFORE BACKFLOW PREVENTION DEVICE

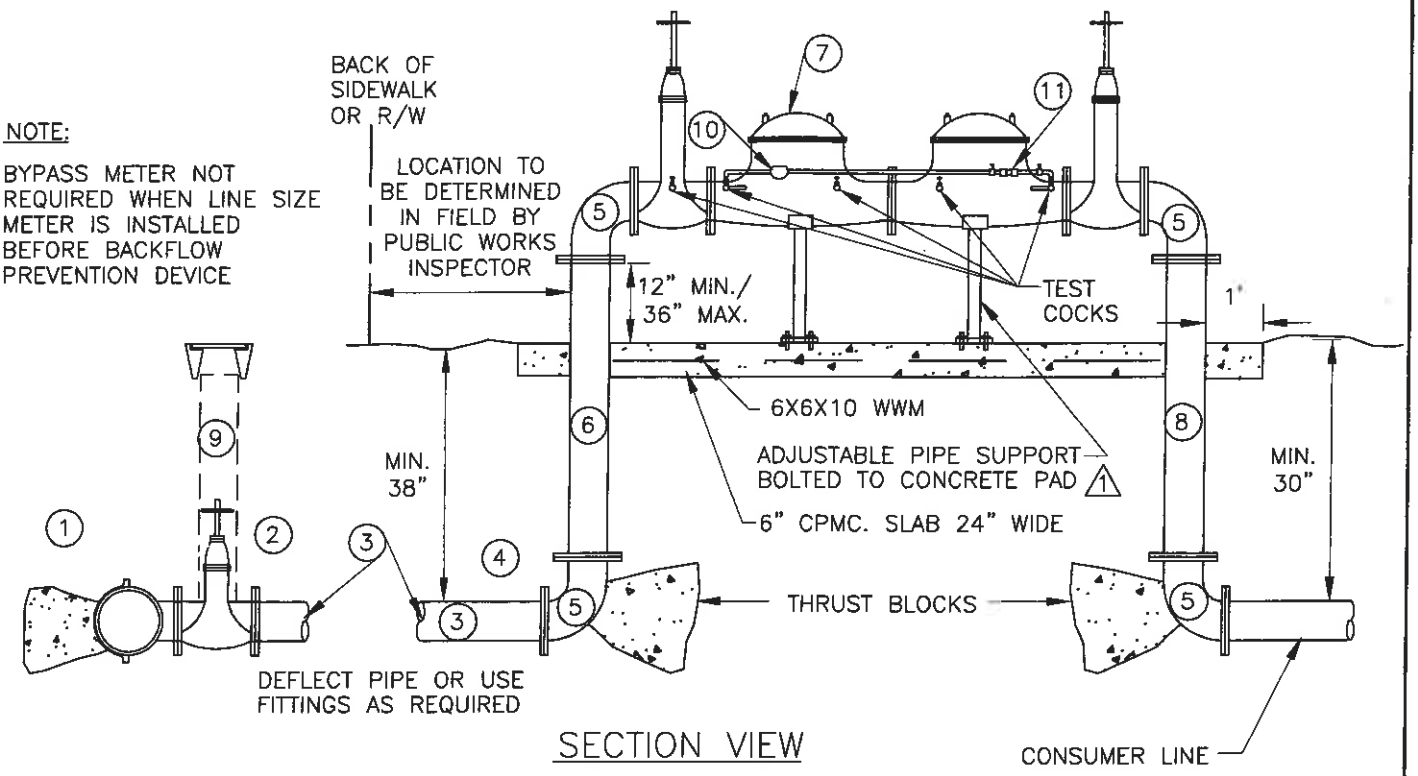

SECTION VIEW

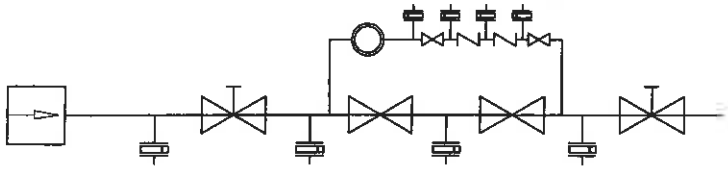

PLAN VIEW

KEY	QUANTITY	DESCRIPTION
1	1	WELD COLLAR PER NORCO STD. 465
2	1	AWWA APPROVED RESILIENT SEAT GATE VALVE
3	–	PIPE – 10 GA. STEEL, CML & C
4	1	WELDED FLANGE, RAISED FACE
5	4	RAISED FACE 90° FLANGED ELBOW, CML & C STD. STEEL
6	1	RAISED FACE FLANGED SPOOL, CML & C STD. STEEL
7	1	DOUBLE CHECK VALVE ASSEMBLY WITH OS & Y VALVES, AS APPROVED BY THE FOUNDATION FOR CROSS CONNECTION CONTROL
8	1	RAISED FACE FLANGED SPOOL, CML & C STD. STEEL
9	1	VALVE CAN PER NORCO STD. 450 AND 455
10	1	3/4" BYPASS "SENSUS" AMI MULTI JET METER ALL BRASS (10" – USE 1" METER) TO BE SUPPLIED BY CONTRACTOR WITH MOUNTING FLANGE FOR MXU ANTENNA 1
11	1	3/4" DOUBLE CHECK VALVE ASSEMBLY AS APPROVED BY THE FOUNDATION FOR CROSS CONNECTION CONTROL (10" – USE 1" D.C.)

REVISION NO:	BY:	DATE:	NO:	BY:	DATE:
1	LJA	05/07/14			

Drawn By: LJA

Date: 3/19/04

APPROVED: C27172
CITY ENGINEER RCE

DETECTOR CHECK DOUBLE CHECK VALVE

Std. Dwg. No. 420

Sheet 1 of 1

CITY of NORCO STANDARD DRAWING

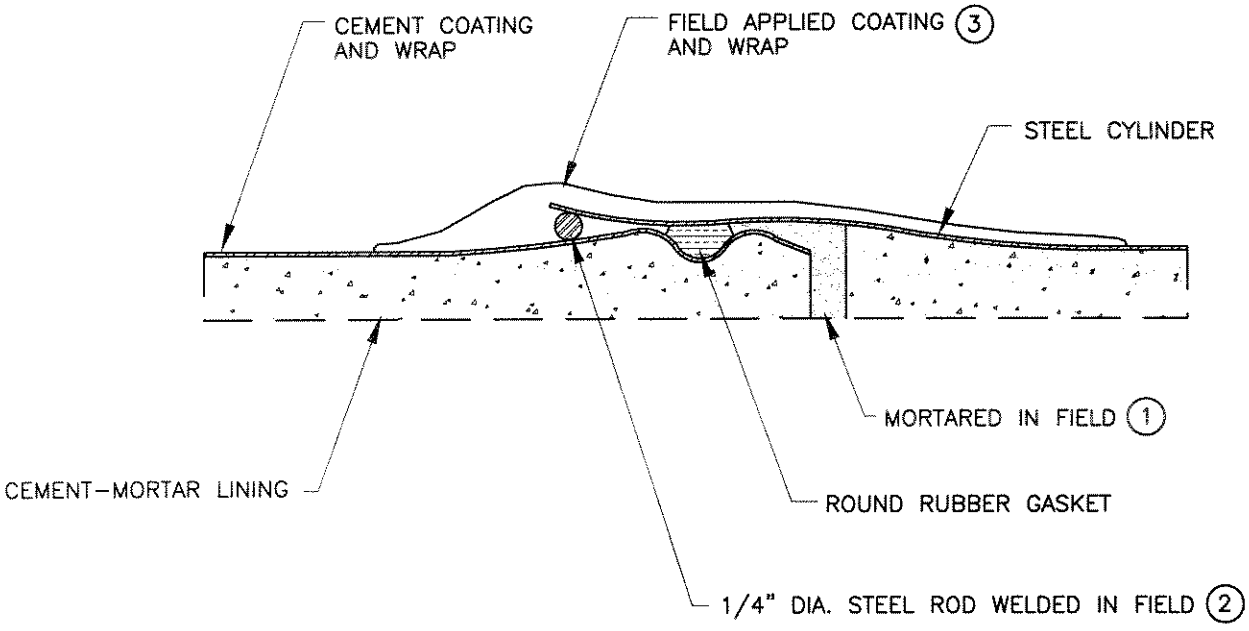

CEMENT-MORTAR LINED AND CEMENT COATED STEEL PIPE

(1) FOR PIPE 20" DIA. AND SMALLER, THE BELL END SHALL BE DAUBED WITH MORTAR PRIOR TO JOINING, AND SHALL BE SWABBED SMOOTH AFTER JOINING. PIPE 24" DIA. AND LARGER SHALL BE MORTARED AND SWABBED FROM THE INSIDE AFTER JOINING.

(2) STEEL ROD SHALL BE 2" LONG AND DOUBLE FILLET WELDED ON THE TOP OF THE JOINT. WHERE SPECIFIED, THE WELD SHALL BE CONTINUOUS AROUND THE JOINTS.

(3) CONCRETE DIAPER

REVISION	NO:	BY:	DATE:	NO:	BY:	DATE:

12/15/04

APPROVED: Joseph S. Schenk 24039
CITY ENGINEER RCE

Drawn By: LJA Date: 3/19/04

STEEL PIPE JOINTS

Std. Dwg. No. 425
Sheet 1 of 1

CITY of NORCO STANDARD DRAWING

DOUBLE CHECK VALVE ASSEMBLY

BRAND NAMES: USC/AWWA APPROVED ASSEMBLY

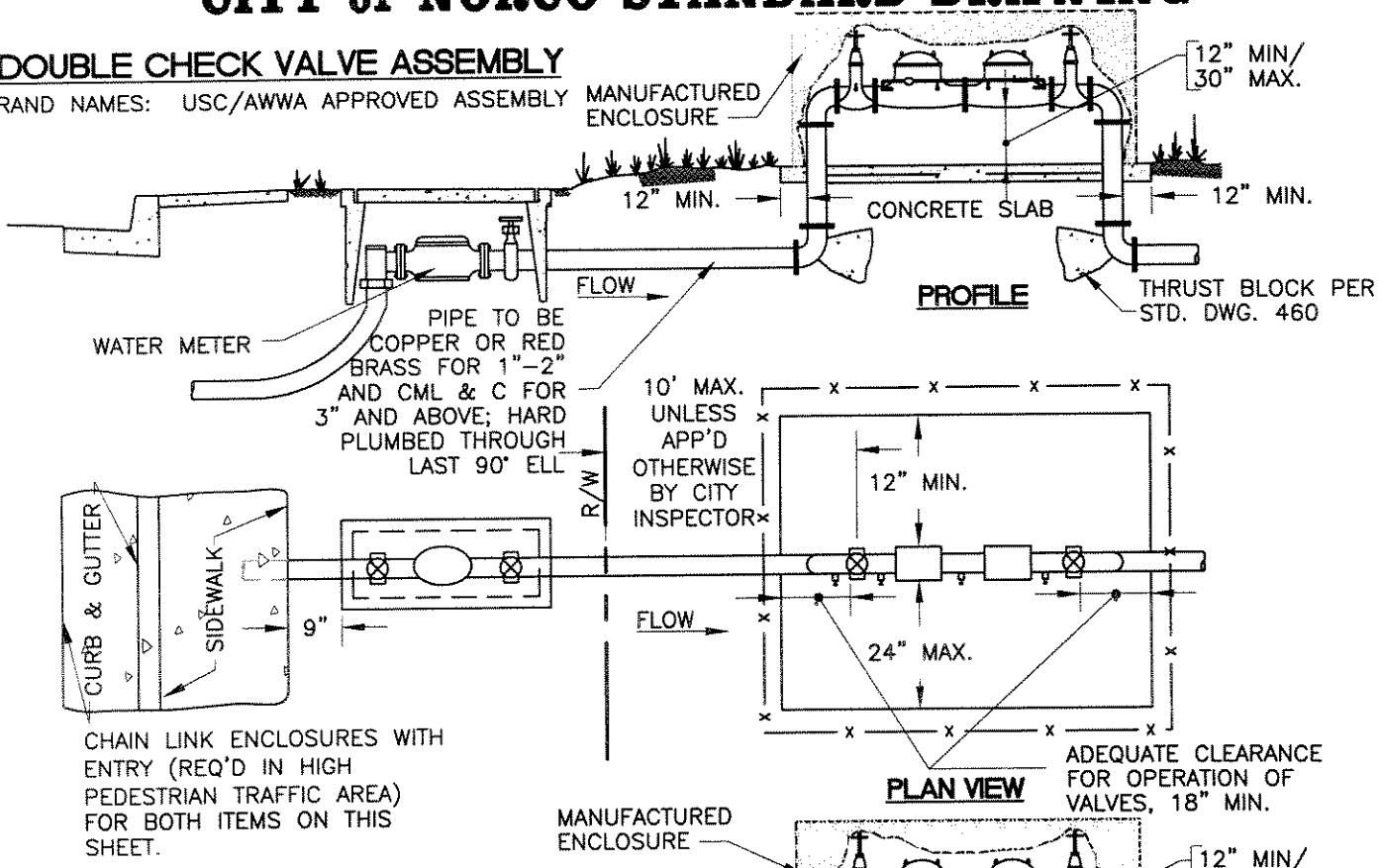

REDUCED PRESSURE PRINCIPLE DEVICES

BRAND NAMES: USC/AWWA APPROVED ASSEMBLY

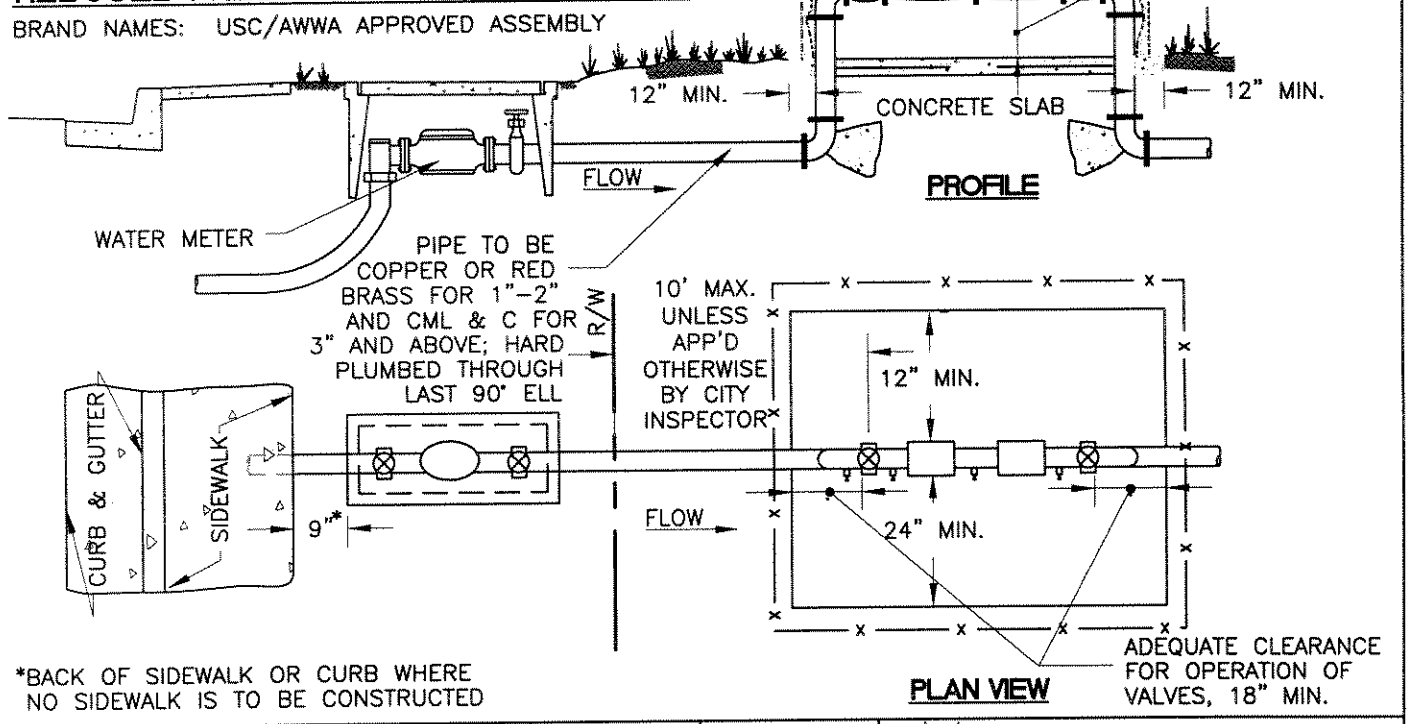

*BACK OF SIDEWALK OR CURB WHERE NO SIDEWALK IS TO BE CONSTRUCTED

REVISION	NO:	BY:	DATE:	NO:	BY:	DATE:

12/15/04

APPROVED: Joseph D. Schenk 24039
CITY ENGINEER RCE

Drawn By: LJA Date: 06/30/04

INSTALLATION OF BACKFLOW PREVENTION ASSEMBLY

Std. Dwg. No. 430A
Sheet 1 of 1

CITY of NORCO STANDARD DRAWING

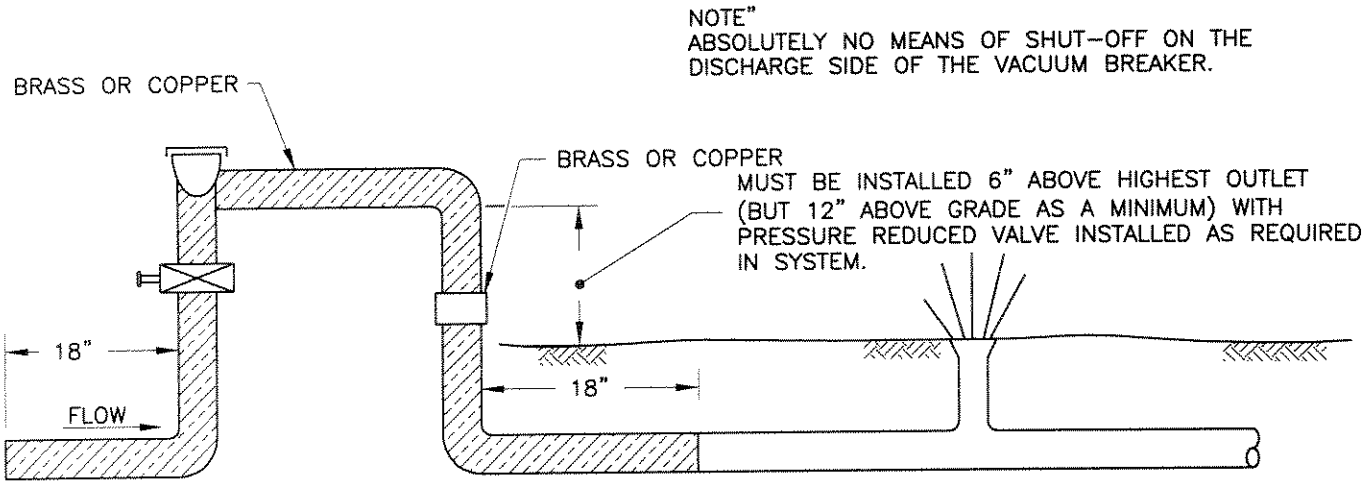

ATMOSPHERE VACUUM BREAKER INSTALLATION

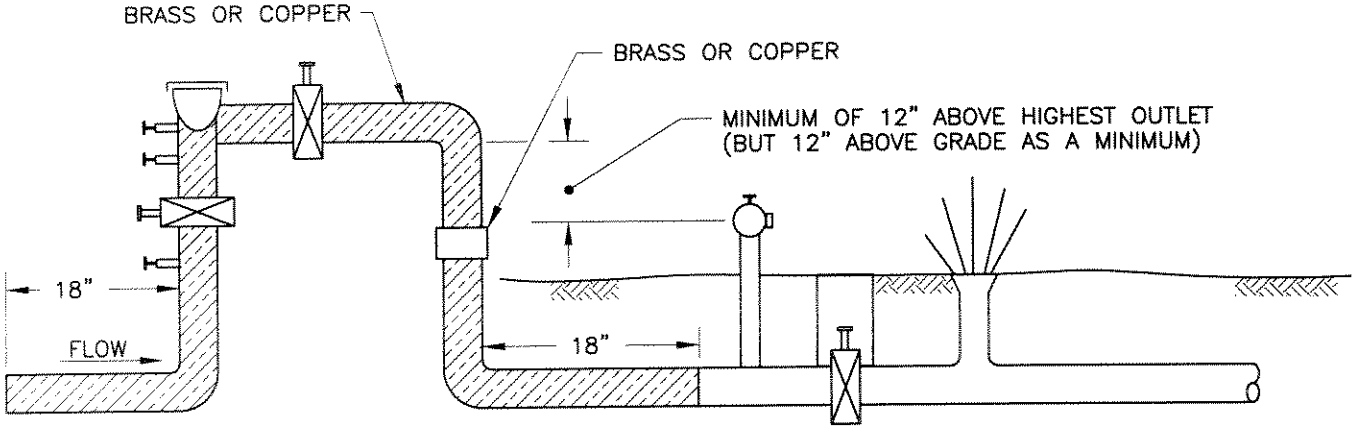

PRESSURE VACUUM BREAKER INSTALLATION

GENERAL INSTALLATION REQUIREMENTS:

THE BACKFLOW PREVENTION ASSEMBLY SHALL BE INSTALLED ON THE PROPERTY SIDE OF AND ADJACENT TO THE METER. SUPPLY PIPELINE BETWEEN THE METER AND THE PROTECTIVE ASSEMBLY MUST BE EXPOSED FOR INSPECTION BY THE WATER PURVEYOR. A DEVIATION MAY BE GRANTED UNDER CERTAIN CIRCUMSTANCES, FOR EXAMPLE, WHERE THE LINE PASSES UNDER THE SIDEWALK OR PAVING. THE PROTECTIVE ASSEMBLY SHOULD BE INSTALLED 12" OR MORE ABOVE HIGH WATER LEVEL OF SURROUNDING GROUND, UNLESS OTHERWISE SPECIFICALLY APPROVED BY THE CITY OF NORCO. ALSO, THE ASSEMBLY MUST BE PROTECTED FROM VEHICULAR TRAFFIC AND SHALL IN NO WAY INTERFERE WITH THE PEDESTRIAN RIGHT-OF-WAY. THERE MUST BE NO OUTLET TEE, TAP, OR CONNECTION OF ANY SORT TO OR FROM THE SUPPLY PIPELINE BETWEEN THE METER AND THE PROTECTIVE ASSEMBLY. RECOMMENDATION OF AN APPROVED BACKFLOW ASSEMBLY MAY BE OBTAINED THROUGH THE CITY OF NORCO, PUBLIC WORKS DEPARTMENT AS PUBLISHED BY U.S.C FOUNDATION FOR CROSS CONNECTION CONTROL AND HYDRAULIC RESEARCH.

REVISION	NO:	BY:	DATE:	NO:	BY:	DATE:

12/15/04

APPROVED: Joseph S. Schenk 24039
CITY ENGINEER RCE

Drawn By: LJA Date: 06/30/04

INSTALLATION OF BACKFLOW PREVENTION ASSEMBLY

Std. Dwg. No.
430B
Sheet 1 of 1

CITY of NORCO STANDARD DRAWING

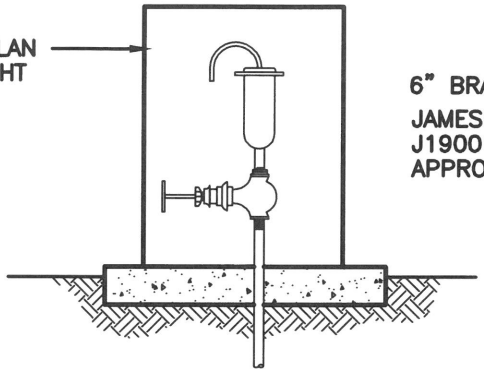

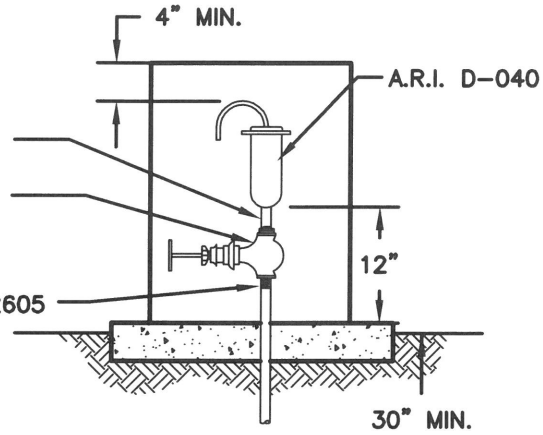

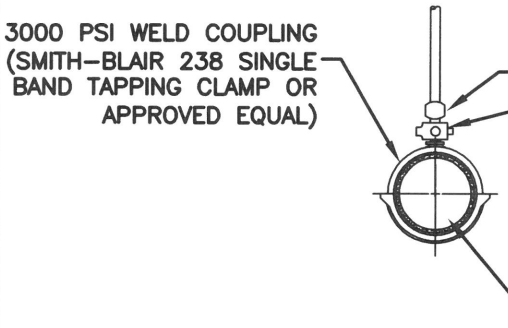

MAIN BEHIND CURB

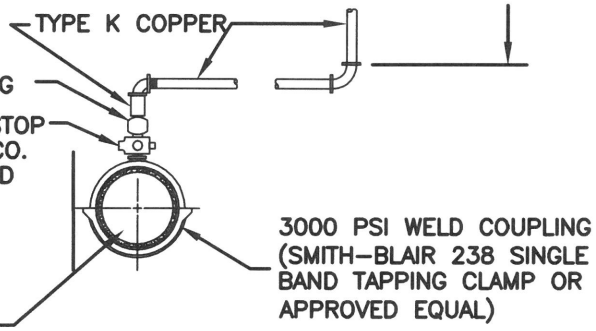

MAIN IN STREET

ALL COUPLINGS SHALL BE TYPE K SOFT COPPER.

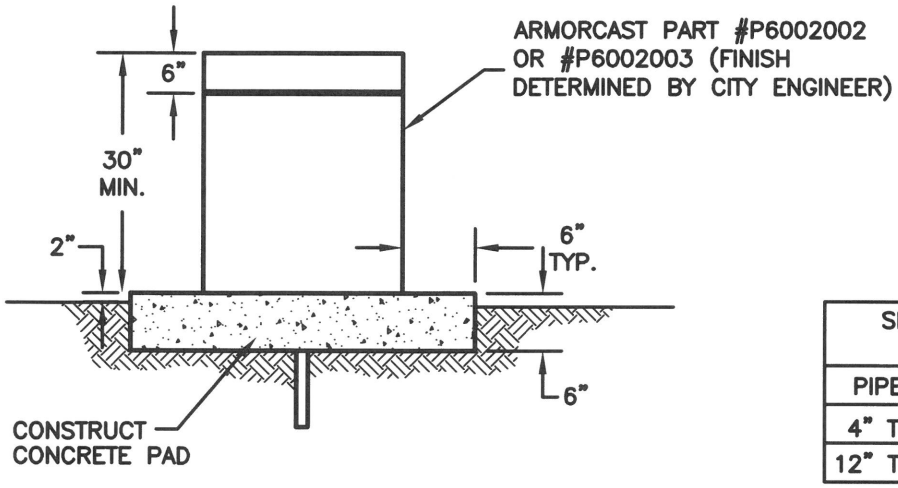

ENCLOSURE DETAIL

NOTES:

1. LOCATION OF UNIVERSAL AIR VALVE ASSEMBLY WILL BE DETERMINED AT THE TIME OF INSTALLATION.

2. SIZE OF UNIVERSAL AIR VALVE WILL BE SHOWN ON PLANS.

SIZING FOR NORMAL INSTALLATIONS	
PIPE SIZE	VALVE SIZE
4" TO 10"	1"
12" TO 18"	2"

REVISION	NO:	BY:	DATE:	NO:	BY:	DATE:

Drawn By: SJN Date: 7/6/15

C27172

APPROVED: CITY ENGINEER RCE

UNIVERSAL AIR VALVE ASSEMBLY

Std. Dwg. No. 435

Sheet 1 of 1

CITY of NORCO STANDARD DRAWING

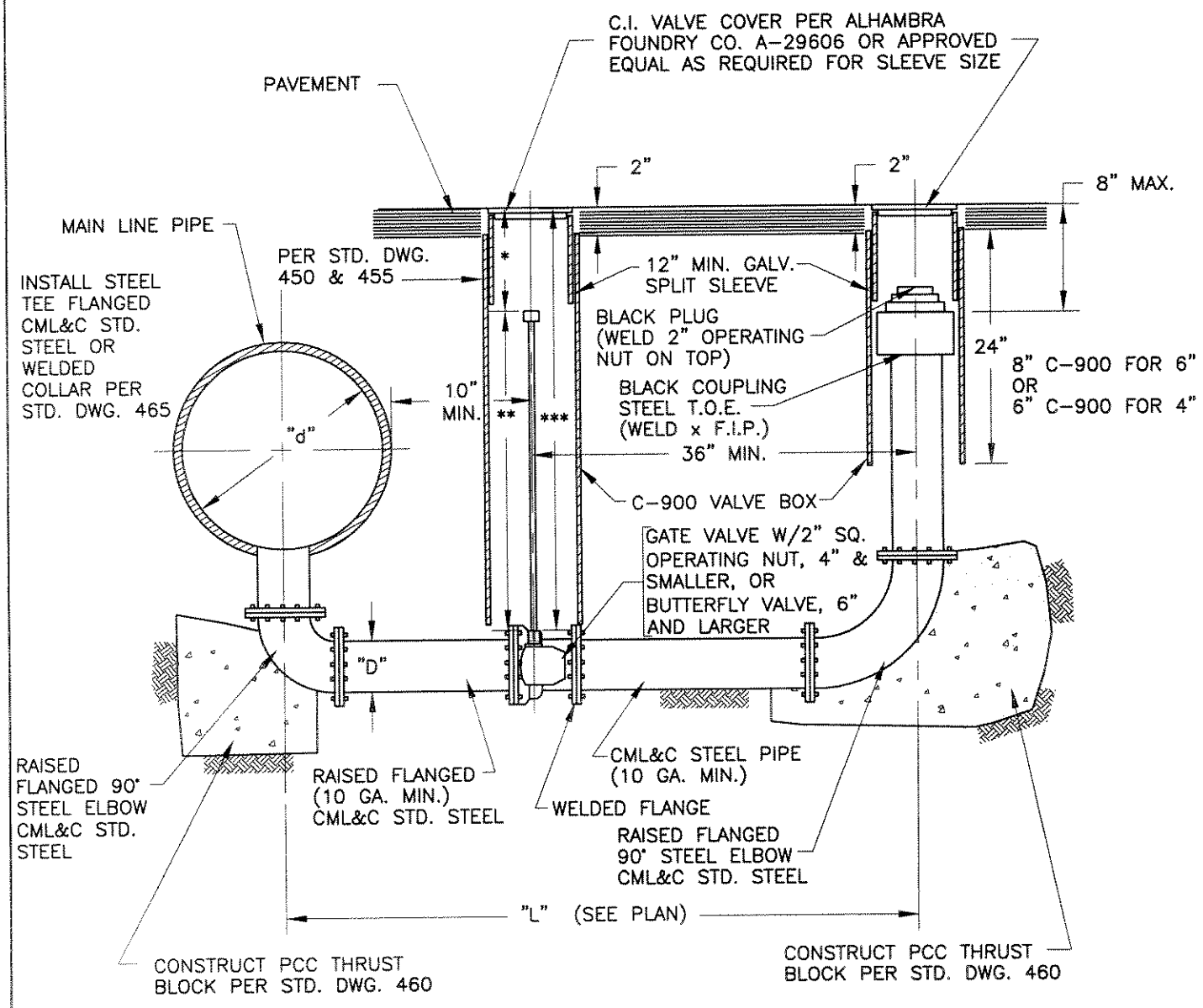

VALVE SIZE	SLEEVE SIZE
2" THRU 8"	6"
9" THRU 24"	8"

*30" MAX./24" MIN.
**12"MIN. VALVE EXTENSION
***48" MAX. W/O EXTENSION REQUIRED

"d" (MAIN LINE)	"D" (NOMINAL SIZE OF BLOW-OFF PIPE & GATE VALVE)
12" THRU 16"	6"
18" THRU 24"	8"

REVISION	NO:	BY:	DATE:	NO:	BY:	DATE:

12/16/04

APPROVED: Joseph S. Schenk 24039
CITY ENGINEER RCE

Drawn By: LJA Date: 3/19/04

TRANSMISSION MAIN BLOW OFF ASSEMBLY

Std. Dwg. No. 440A
Sheet 1 of 1

CITY of NORCO STANDARD DRAWING

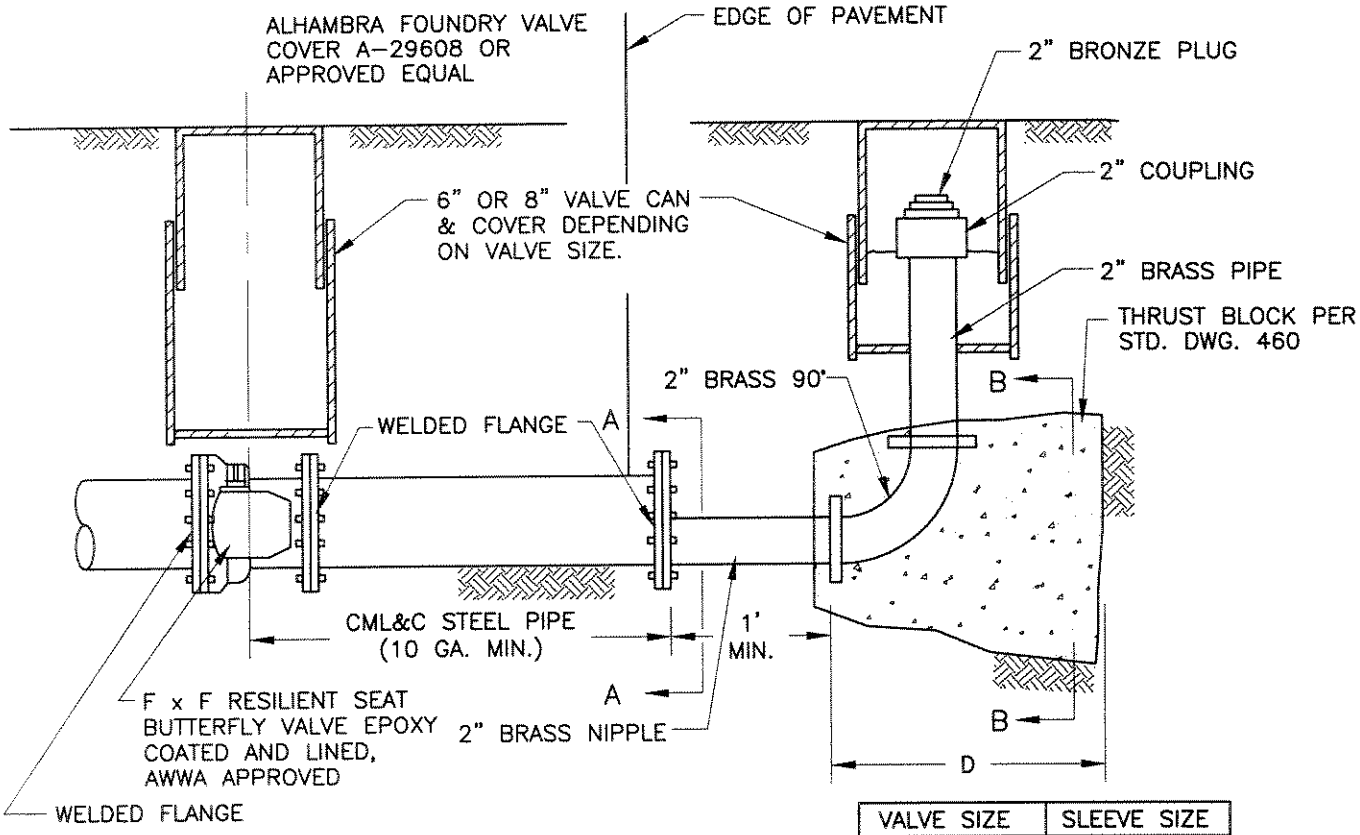

SEE BUTTERFLY VALVE INSTALLATION STD. DWG. 455A

VALVE SIZE	SLEEVE SIZE
2" THRU 8"	6"
10" THRU 24"	8"

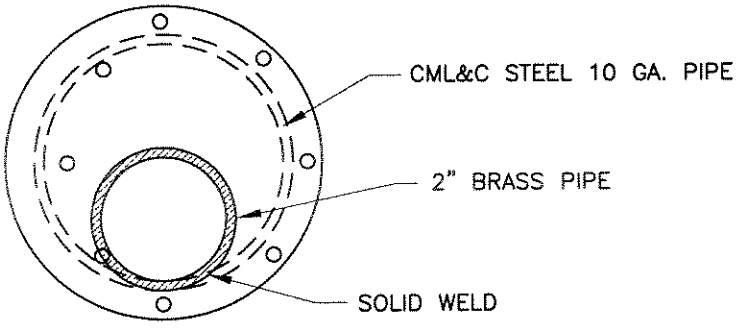

SECTION A–A

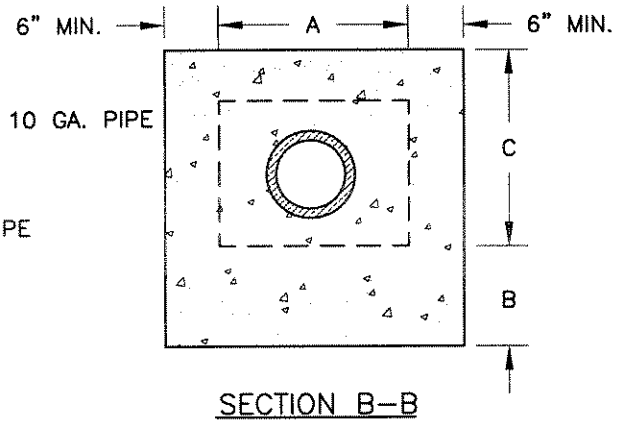

SECTION B–B

NOTE: ALL JOINTS WITHIN 120 FEET OF SECTION A–A SHALL RECEIVE A FULL WELD.

NOTE:

THE FUTURE EXTENSION STUB SHALL BE TESTED AND CHLORINATED WITH THE REST OF THE MAIN AND BLOWN OFF THROUGH THE 2" PLUG.

REVISION	NO:	BY:	DATE:	NO:	BY:	DATE:

12/16/04

APPROVED: Joseph S. Schenk 24039
CITY ENGINEER RCE

Drawn By: LJA Date: 3/19/04

BLOW OFF (FOR FUTURE EXTENSION)

Std. Dwg. No. 440B
Sheet 1 of 1

CITY of NORCO STANDARD DRAWING

NOTE:

(A) FRONT OF METER BOX TO BE LOCATED 4" BEHIND BACK OF CURB OR AS DIRECTED BY THE CITY ENGINEER.

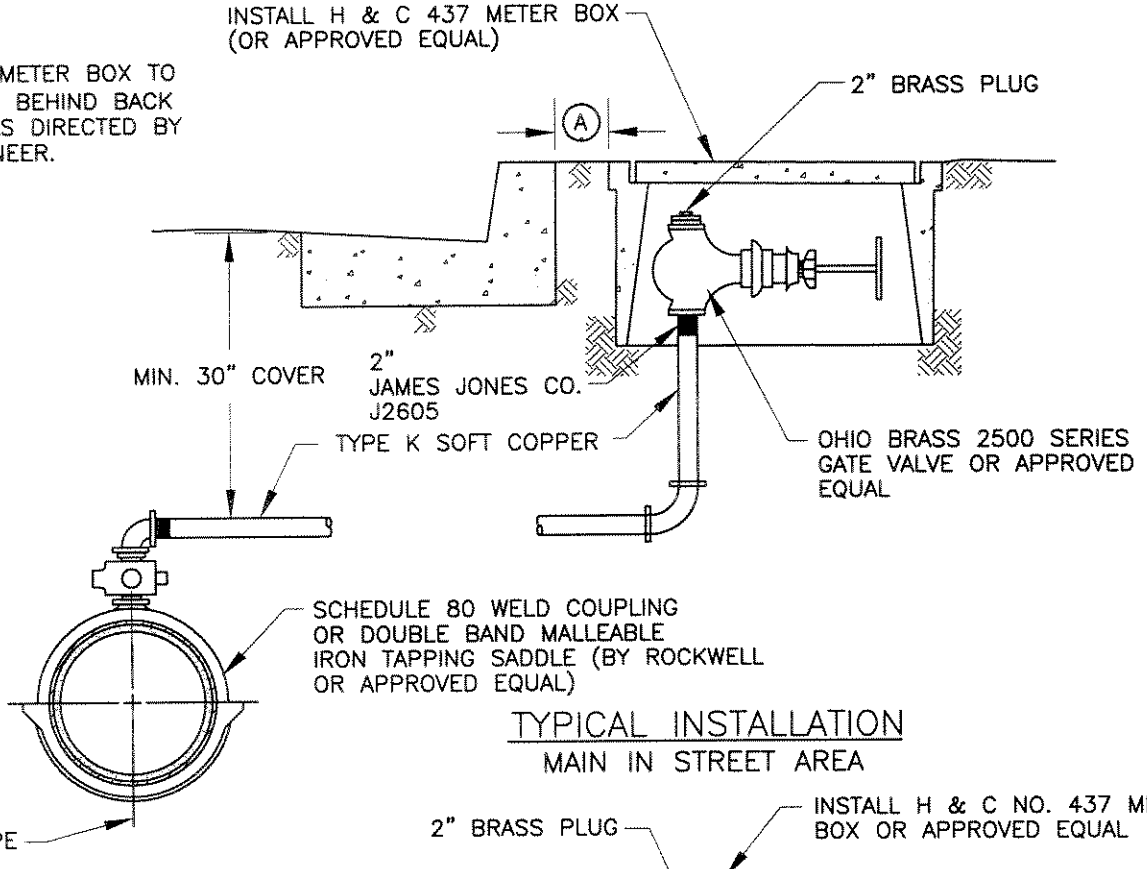

TYPICAL INSTALLATION

MAIN IN STREET AREA

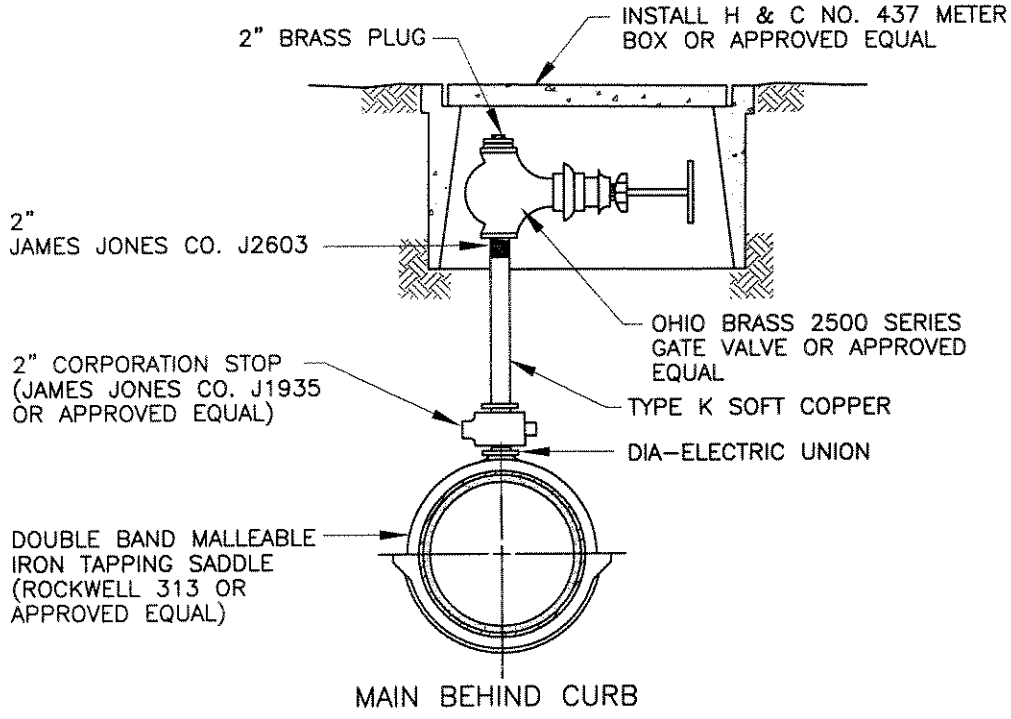

MAIN BEHIND CURB

ALL COUPLINGS SHALL BE RED BRASS OR APPROVED EQUAL.

REVISION	NO:	BY:	DATE:	NO:	BY:	DATE:

12/16/04

APPROVED: Joseph S. Scheuh 24039
CITY ENGINEER RCE

Drawn By: LJA Date: 3/19/04

2" BLOW OFF ASSEMBLY

Std. Dwg. No. 440C

Sheet 1 of 1

CITY of NORCO STANDARD DRAWING

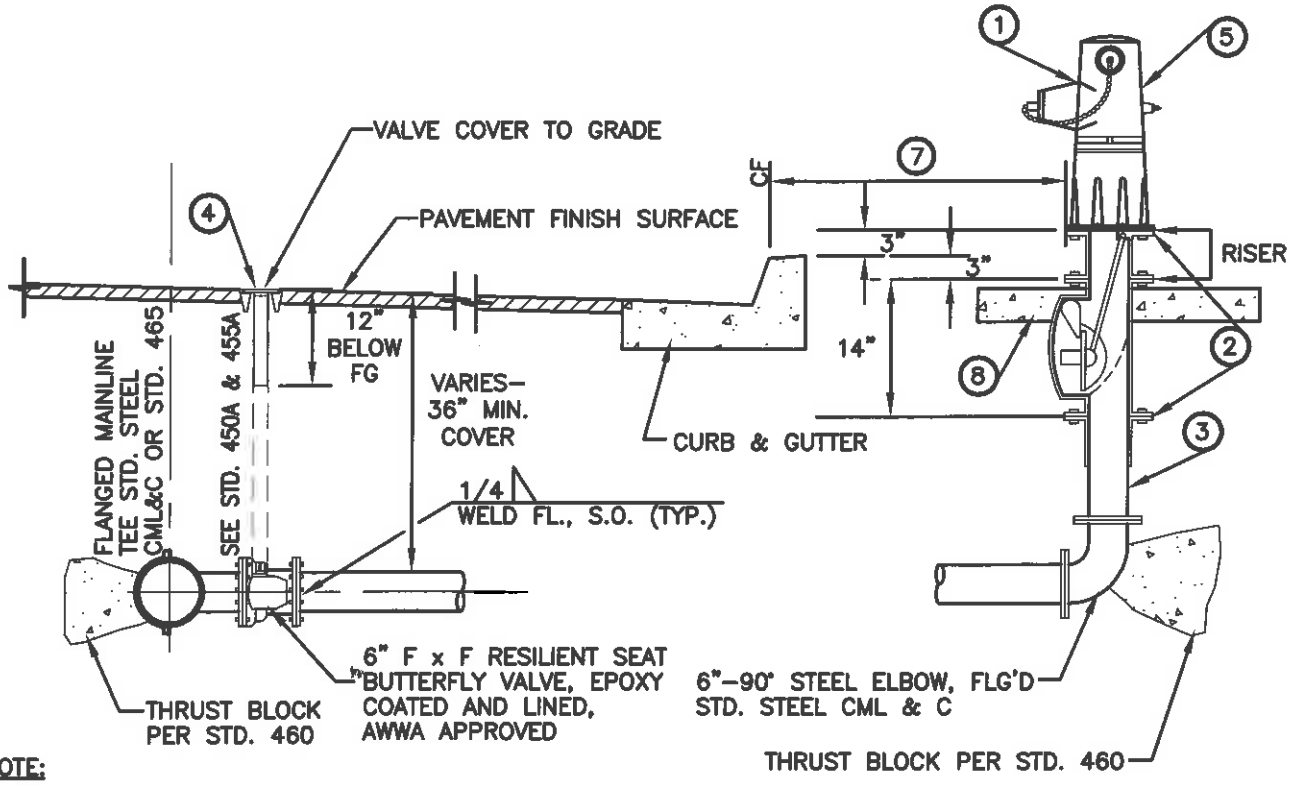

NOTE:

1. TYPE "A" – FOR RESIDENTIAL ZONES – HYDRANT COMPLETE, ONE 4" STEAMER HOSE OUTLET AND ONE 2–½" OUTLET, 8 HOLE PATTERN, JAMES JONES MODEL J–4040. FURNISH WITH PLASTIC CAPS AND CHAIN. 4" OUTLET PERPENDICULAR TO CURB.

   TYPE "B" – FOR COMMERCIAL ZONES – HYDRANT COMPLETE, ONE 4" STEAMER HOSE OUTLET AND TWO 2–½" OUTLETS, 8 HOLE PATTERN. JAMES JONES MODEL J–4060. FURNISH WITH PLASTIC CAPS AND CHAIN. 4" OUTLET PERPENDICULAR TO CURB.

2. 6" HYDRANT 8 HOLE SHEAR CHECK ASSEMBLY COMPLETE, EPOXY COATED, MFG. BY CLOW CORP. OR APPROVED EQUAL.

3. 6" A.S.A. 200# FLG X FLG 8 HOLE CML & C PIPE SPOOL.

4. CAST IRON VALVE COVER TO BE ALHAMBRA FOUNDRY #A29606 OR APPROVED EQUAL, MARKED WATER.

5. ALL EXPOSED SURFACES SHALL BE CLEANED AND GIVEN ONE COAT OF PRIMER NO. 2182 AS MANUFACTURED BY RUSTOLEUM CORP. AND ONE FINISH COAT OF NO. 2148 EQUIPMENT YELLOW AS MANUFACTURED BY RUSTOLEUM CORP. ON–SITE HYDRANTS FINISH COAT RED.

6. HYDRANTS SHALL BE INSTALLED NOT CLOSER THAN 5' FROM A DRIVEWAY OR STREET LIGHT, POWER POLE, SIGNAL, BEGIN CURB RETURNS, ETC.

7. 24" UNLESS OTHERWISE DIRECTED BY THE CITY ENGINEER.

8. POUR 6"D X 4'L X 4'W CONCRETE PAD. ALLOW ACCESS TO BOLTS.

9. INSTALL RAYOLITE BLUE PAVEMENT MARKER NO. 2SRPM–DB 6" OFF STREET ℄ ON HYDRANT SIDE DIRECTLY IN FRONT OF HYDRANT PER CITY STD. DWG. NO. 446.

REVISION NO:	BY:	DATE:	NO:	BY:	DATE:
1	SJN	08–11–2014			

Drawn By: LJA Date: 3/19/04

APPROVED: C27172 CITY ENGINEER RCE

FIRE HYDRANT ASSEMBLY

Std. Dwg. No. 445

Sheet 1 of 1

CITY of NORCO STANDARD DRAWING

FIGURE 1
TWO LANE STREET

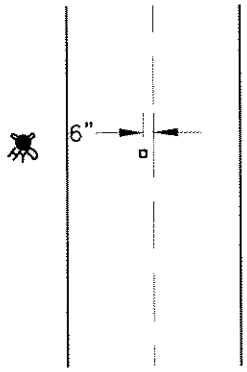

LEGEND

FIRE HYDRANT

BLUE PAVEMENT MARKER

FIGURE 2
MULTI-LANE STREET

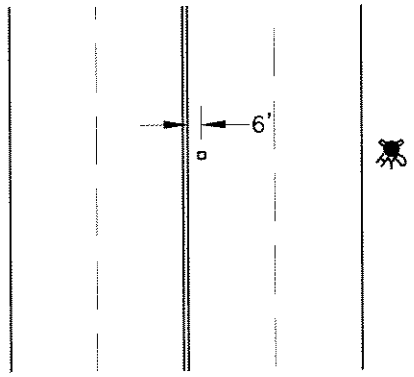

FIGURE 3
AN INTERSECTION

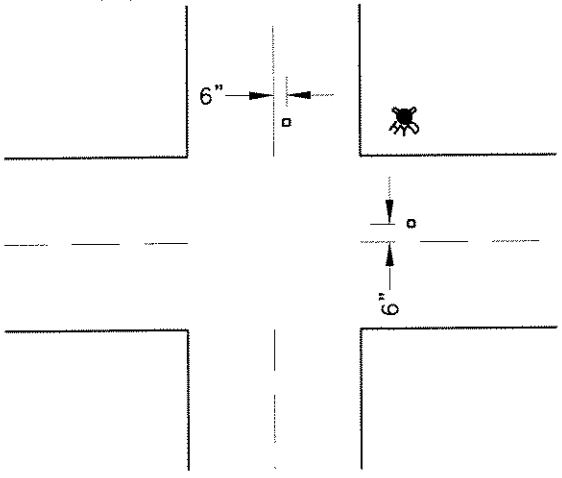

FIGURE 4
FOUR LANE STREET WITH TURN LANE AT INTERSECTION

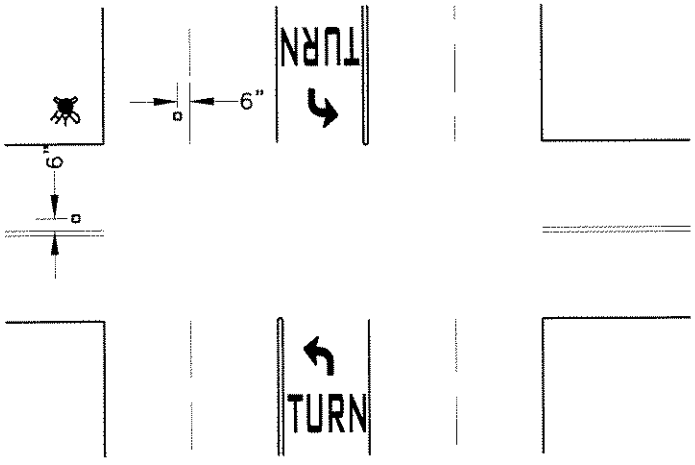

FIGURE 5
MULTI-LANE STREET WITH 2-WAY TURN LANE

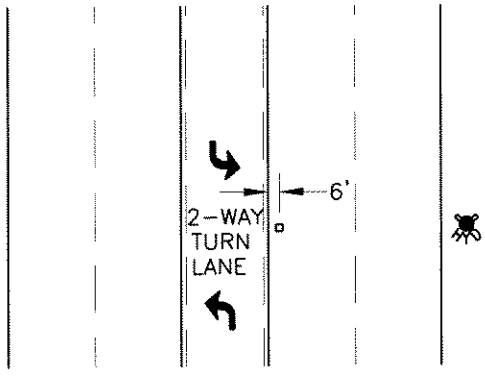

FIGURE 6
FREEWAYS AND EXPRESSWAYS

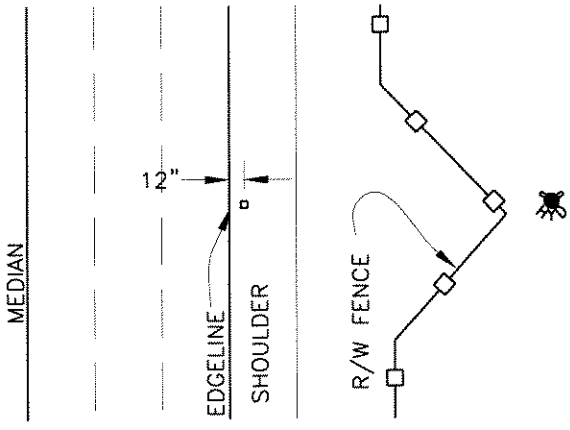

REVISION	NO:	BY:	DATE:	NO:	BY:	DATE:

1/25/05

APPROVED: Joseph S. Schenk 24039
CITY ENGINEER RCE

Drawn By: LJA

Date: 01/26/05

TYPICAL HYDRANT MARKER LOCATION

Std. Dwg. No.
446
Sheet 1 of 1

CITY of NORCO STANDARD DRAWING

VALVE SIZE	SLEEVE SIZE
2" thru 8"	6"
10" thru 24"	8"

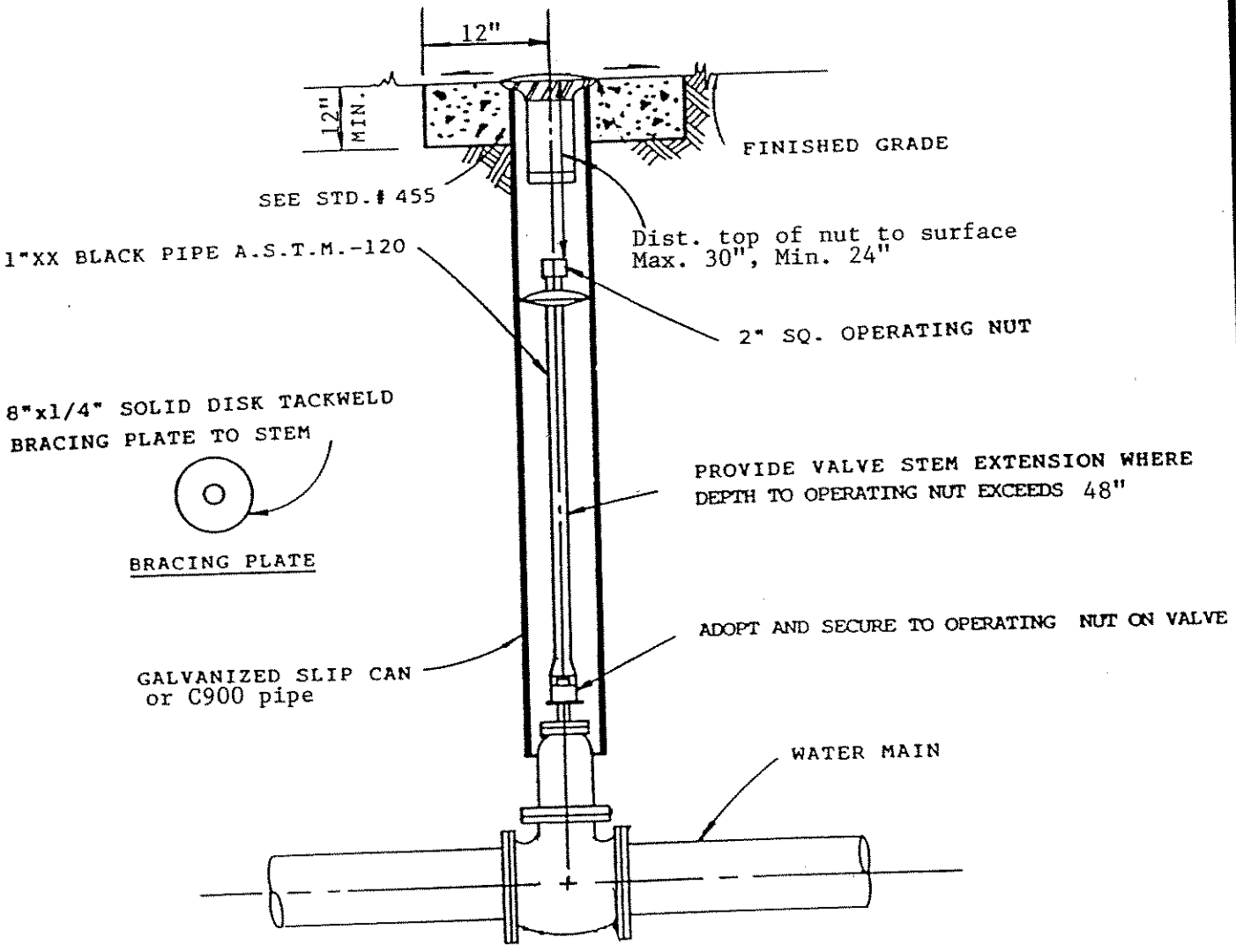

REVISIONS			
NO.	BY	DATE	
NO.	BY	DATE	
NO.	BY	DATE	

Drawn By: Date: 5/12/92 APPROVED: CITY ENGINEER RCE 9399

STD. DWG. NO.

GATE VALVE EXTENSION

450

CITY of NORCO STANDARD DRAWING

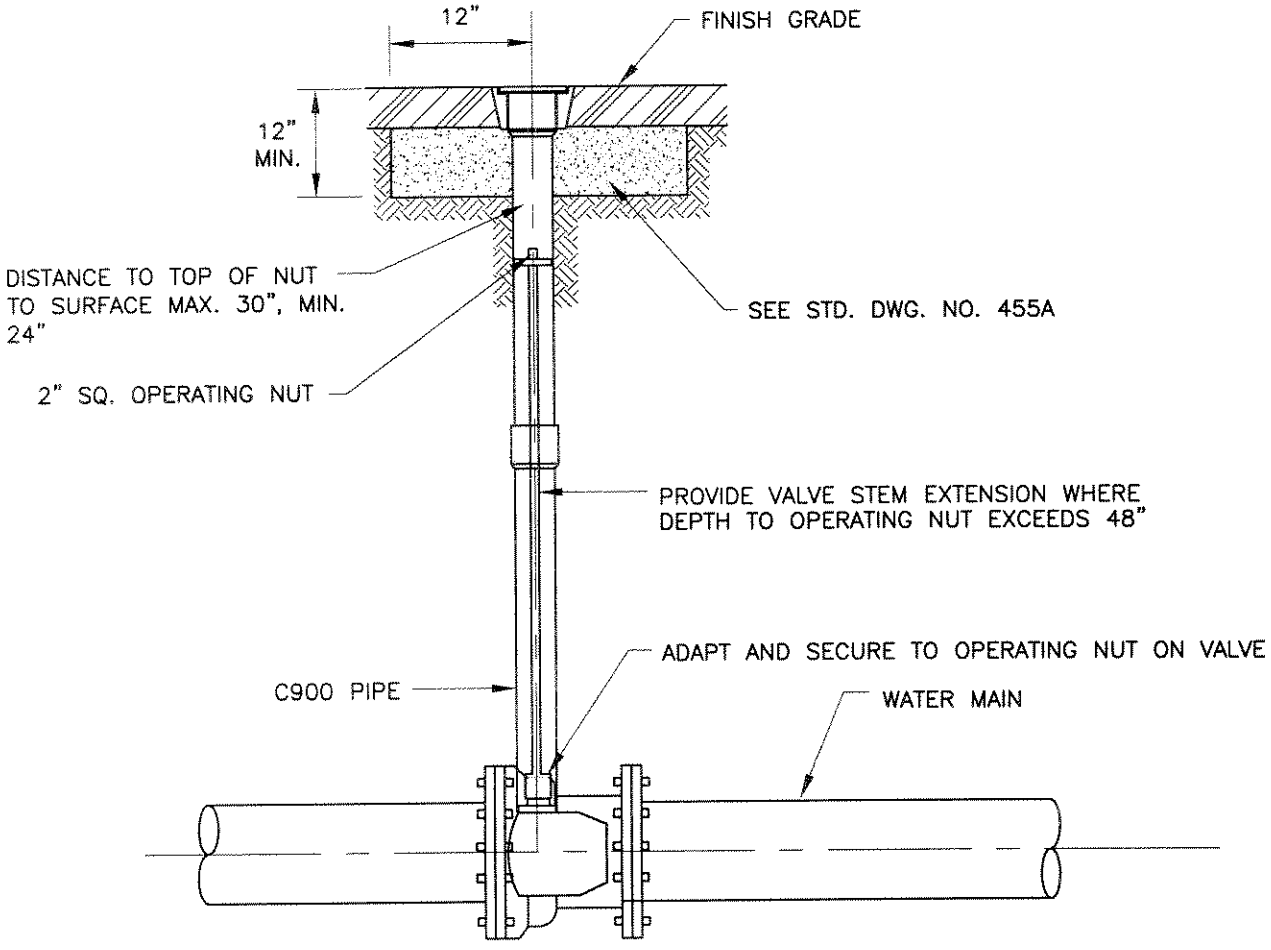

REVISION	NO:	BY:	DATE:	NO:	BY:	DATE:

12/10/04

APPROVED: Joseph S. Schenk 24039
CITY ENGINEER RCE

Drawn By: LJA

Date: 3/19/04

BUTTERFLY VALVE EXTENSION

Std. Dwg. No.
451
Sheet 1 of 1

CITY of NORCO STANDARD DRAWING

VALVE SIZE	SLEEVE SIZE
2" THRU 8"	6"
10" THRU 24"	8"

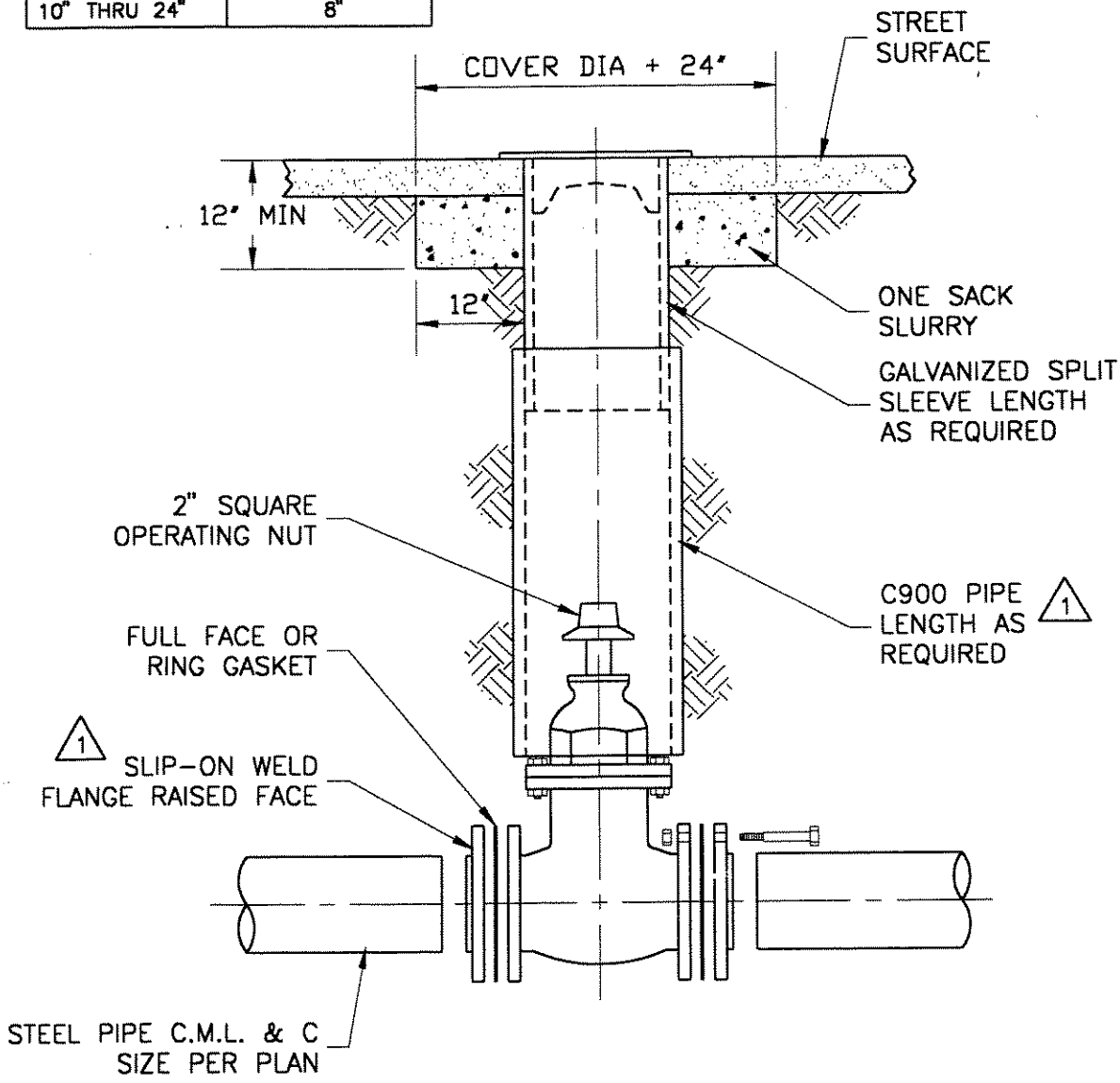

NOTE: 4" WATER VALVES SHALL BE RESILIENT SEAT WEDGE VALVES EPOXY LINED AND COATED AWWA APPROVED. 6" AND LARGER SHALL BE RESILIENT TYPE BUTTERFLY VALVES EPOXY LINED AND COATED AND AWWA APPROVED.

1

REVISION	NO:	BY:	DATE:	NO:	BY:	DATE:
	1	JS	7/21/00			

Drawn By: M Partida Date: 11/02/99

APPROVED: Joseph S. Schenk CITY ENGINEER RCE 24039

GATE VALVE and BOX

Std. Dwg. No. 455

Sheet 1 of 1

CITY of NORCO STANDARD DRAWING

⚠1

VALVE SIZE	SLEEVE SIZE
2" THRU 8"	6"
10" THRU 24"	8"

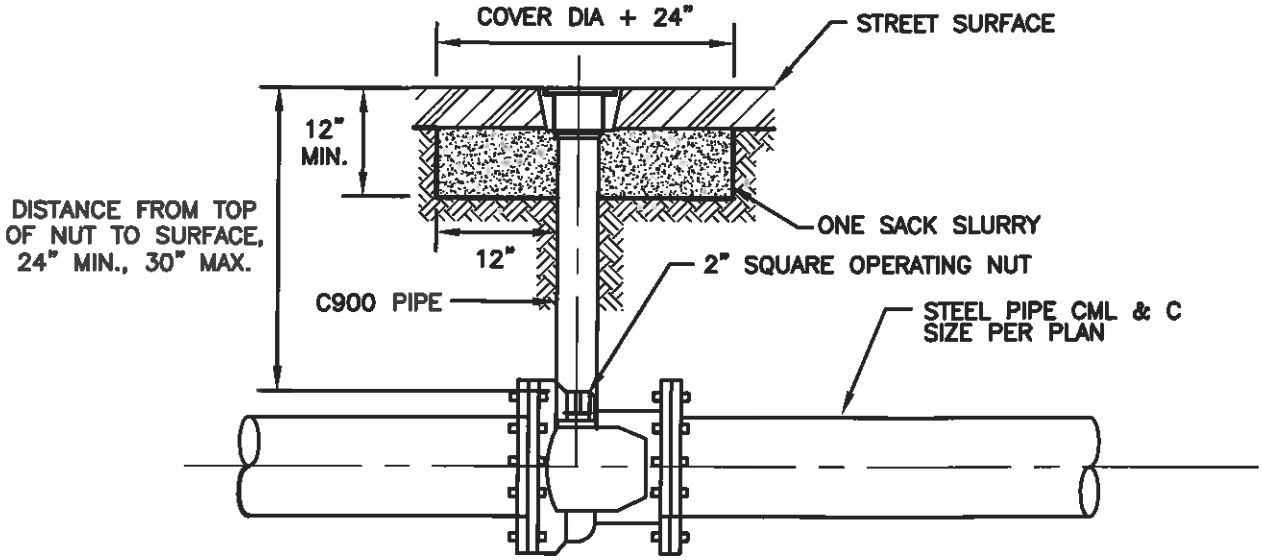

REVISION NO:	BY:	DATE:	NO:	BY:	DATE:
⚠1	SJN	12-3-2014			

Drawn By: LJA Date: 3/19/04

C27172

APPROVED: CITY ENGINEER RCE

BUTTERFLY VALVE AND BOX

Std. Dwg. No. 456

Sheet 1 of 1

CITY of NORCO STANDARD DRAWING

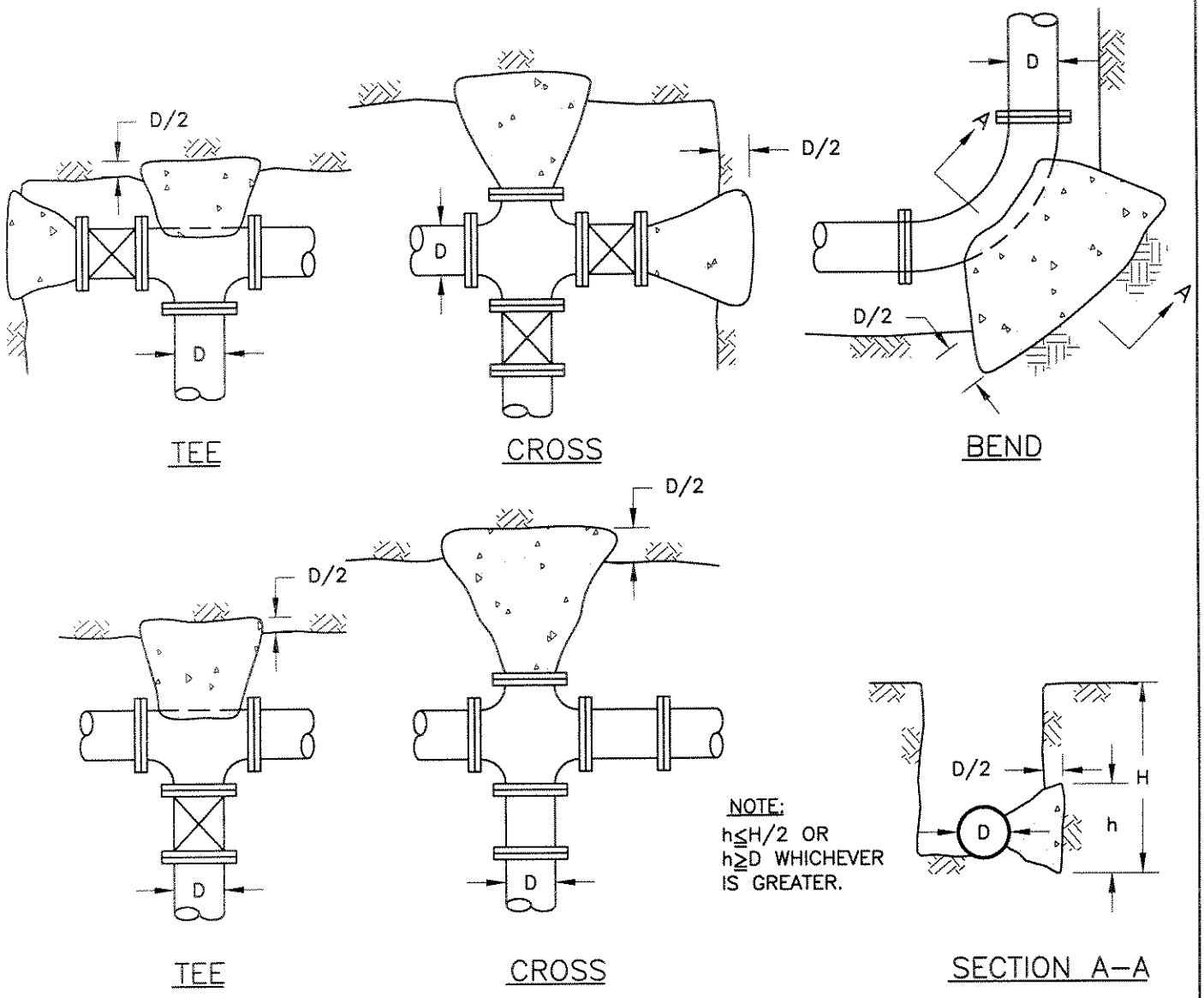

NOTES:

1. CONCRETE SHALL BE 420–C–2000.
2. THRUST BLOCKS SIZED FOR TEST PRESSURE AT 200 PSI WITH A SOIL BEARING PRESSURE VALUE OF 1500 PSF.
3. THRUST BLOCKING SHALL BE PLACED SO THE PIPE AND FITTING JOINTS WILL BE ACCESSIBLE FOR REPAIR.
4. THRUST BLOCK SHALL BE POURED AGAINST UNDISTURBED SOIL.
5. ALL WATER MAINS SHALL BE CEMENT MORTAR LINES AND CEMENT COATED STEEL, 10 GA. MIN.

BEARING AREA OF THRUST BLOCK (FT^2)					
PIPE SIZE	TEES/ ENDS	90°	45°	22 ½%	11 ¼%
4"	2.5	3.5	2.0	N.A.	N.A.
6"	5.0	7.0	4.0	2.0	N.A.
8"	8.5	12.0	6.5	3.5	N.A.
10"	13.0	18.5	10.0	5.0	2.5
12"	18.5	25.5	14.0	7.0	3.5
14"	24.5	35.0	19.0	10.0	5.0
16"	32.0	45.0	24.0	12.5	6.0
18"	40.0	56.0	30.5	15.5	8.0
20"	49.0	69.0	37.5	19.0	10.0
24"	70.0	98.5	53.5	27.5	13.5

REVISION	NO:	BY:	DATE:	NO:	BY:	DATE:

12/16/04

APPROVED: Joseph S. Schenk 24039
CITY ENGINEER RCE

Drawn By: LJA Date: 3/19/04

THRUST BLOCKS

Std. Dwg. No.
460
Sheet 1 of 1

CITY of NORCO STANDARD DRAWING

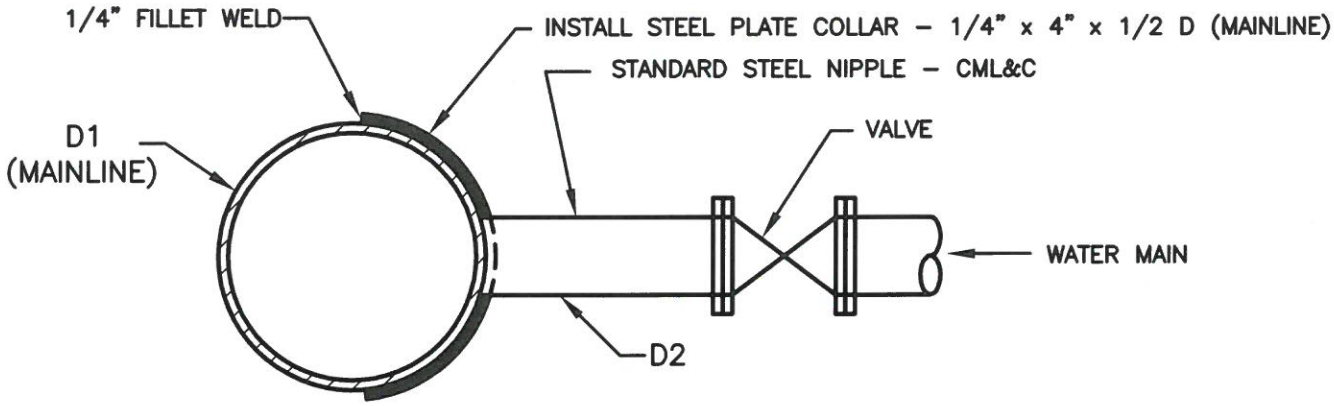

⚠1 CASE 1: D2 < ½ D1

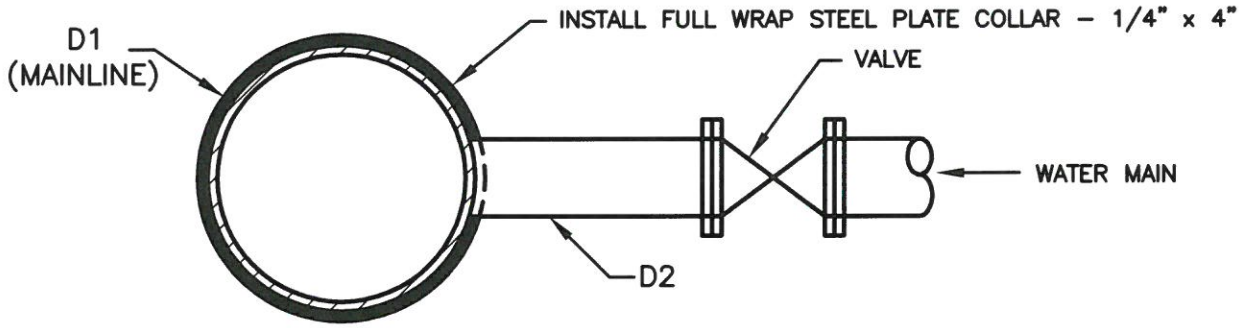

⚠1 CASE 2: D2 ≥ ½ D1

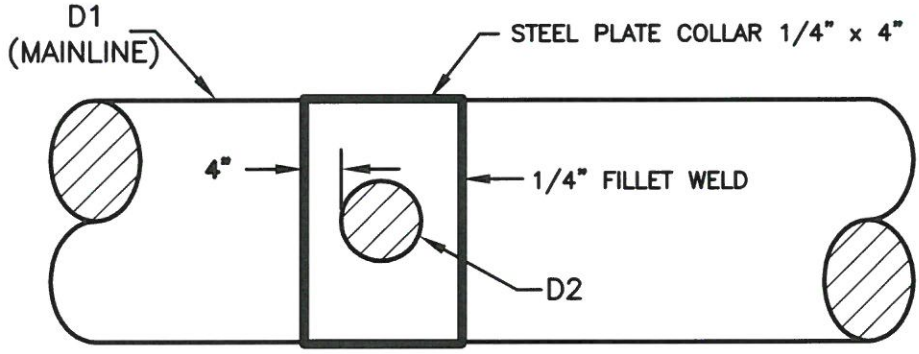

NOTES:

1. WHEN A VALVE IS INSTALLED ON A MAIN, A WELD COLLAR WILL BE INSTALLED ON PIPE AROUND NIPPLE.
2. ⚠1 NO SIZE ON SIZE HOT TAPS ARE ALLOWED. CUT IN TEE OR INSTALL SMITH BLAIR MODEL 663 TAPPING SLEEVE.
3. ALL SIZE ON SIZE CONNECTIONS SHALL UTILIZE FLANGED TEES.
4. TAPPING CLAMPS ARE NOT ALLOWED FOR SIZE ON SIZE CONNECTIONS.

REVISION NO:	BY:	DATE:	NO:	BY:	DATE:
⚠1	SJN	12-3-2014			

Drawn By: LJA Date: 3/19/04

C27172

APPROVED: CITY ENGINEER RCE

WELD COLLAR

Std. Dwg. No. 465

Sheet 1 of 1

CITY of NORCO STANDARD DRAWING

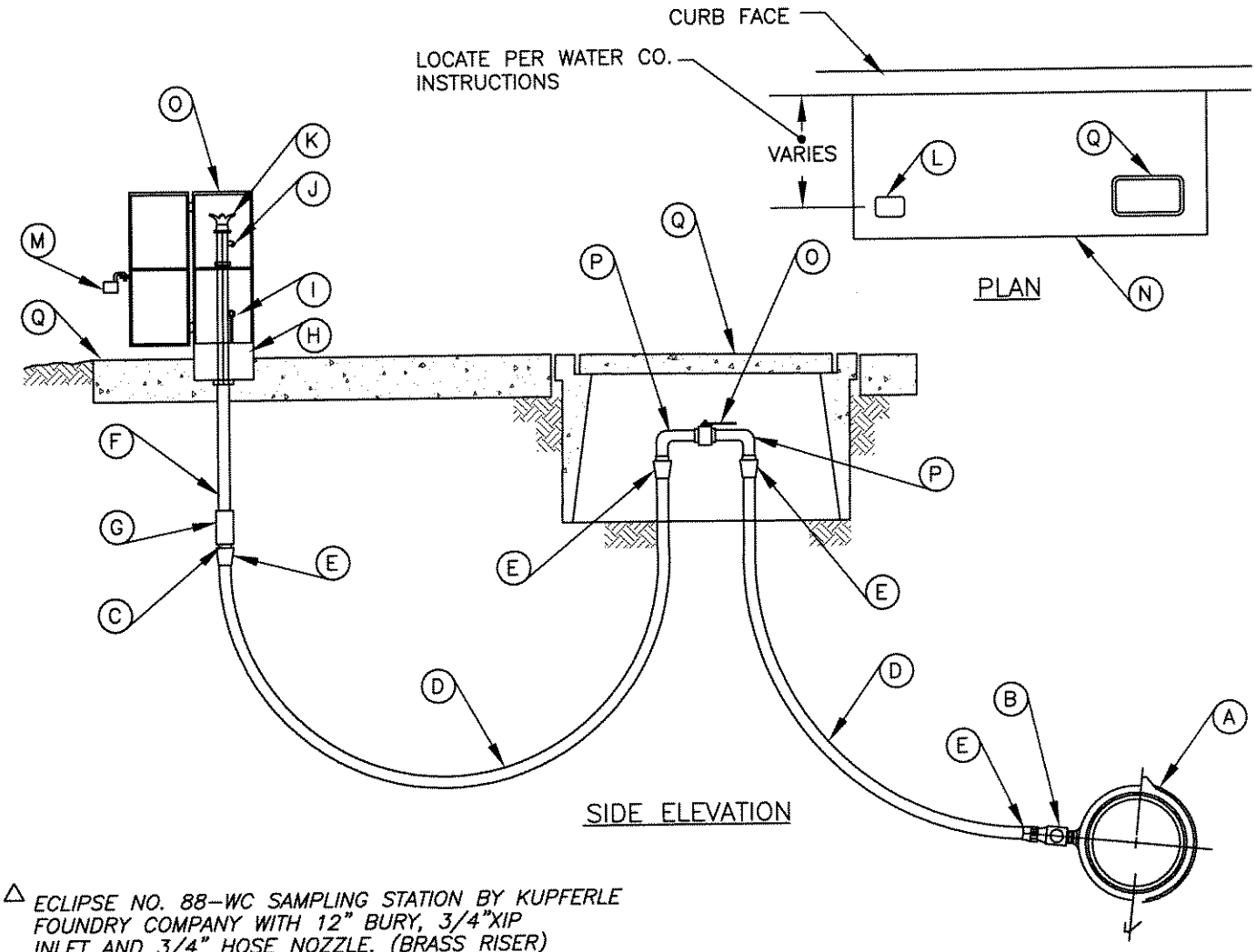

△ *ECLIPSE NO. 88-WC SAMPLING STATION BY KUPFERLE FOUNDRY COMPANY WITH 12" BURY, 3/4"XIP INLET AND 3/4" HOSE NOZZLE. (BRASS RISER)*

DESCRIPTION	
(A) SCHEDULE 80 COUPLING OR ROCKWELL MODEL 238 TAPPED FULL CIRCLE CLAMP, NPT SINGLE BAND	△(J) BRASS NOZZLE WITH THREADS
(B) 1" BRASS CORPORATION STOP J-3403 (1" IPS x 1" CT COMPRESSION)	△(K) IRON HANDLE
(C) 3/4" MALE x 1" FEMALE BRASS BUSHING	△(L) SAMPLING STATION CAST ALUMINUM COVER
(D) 1" TYPE K SOFT COPPER TUBING	△(M) PADLOCK PROVISION
(E) 1" BRASS MALE IRON PIPE THREAD x CT COMPRESSION J-2605	(N) 2'-6" x 4'-6" x 4" THICK CONCRETE PAD
△(F) 3/8" BRASS PIPE INSIDE 1" BRASS PIPE	(O) 1" BRASS CURB STOP, TEFLON COATED BALL VALVE W/LEVER HANDLE, JONES MODEL #J-1905
△(G) BRASS VALVE BODY & ASSEMBLY	(P) 1" BRASS STREET ELBOW (TOTAL OF 2)
△(H) ALUMINUM BASE	(Q) CONCRETE METER BOX & COVER #437 1PC LID
△(I) BRASS PET COCK	

REVISION	NO:	BY:	DATE:	NO:	BY:	DATE:

Drawn By: LJA

Date: 04/15/04

APPROVED: Joseph Schenk 24039
CITY ENGINEER RCE

SAMPLING STATION

Std. Dwg. No. **470**
Sheet 1 of 1

500
SEWER
STANDARDS

CITY of NORCO STANDARD DRAWING

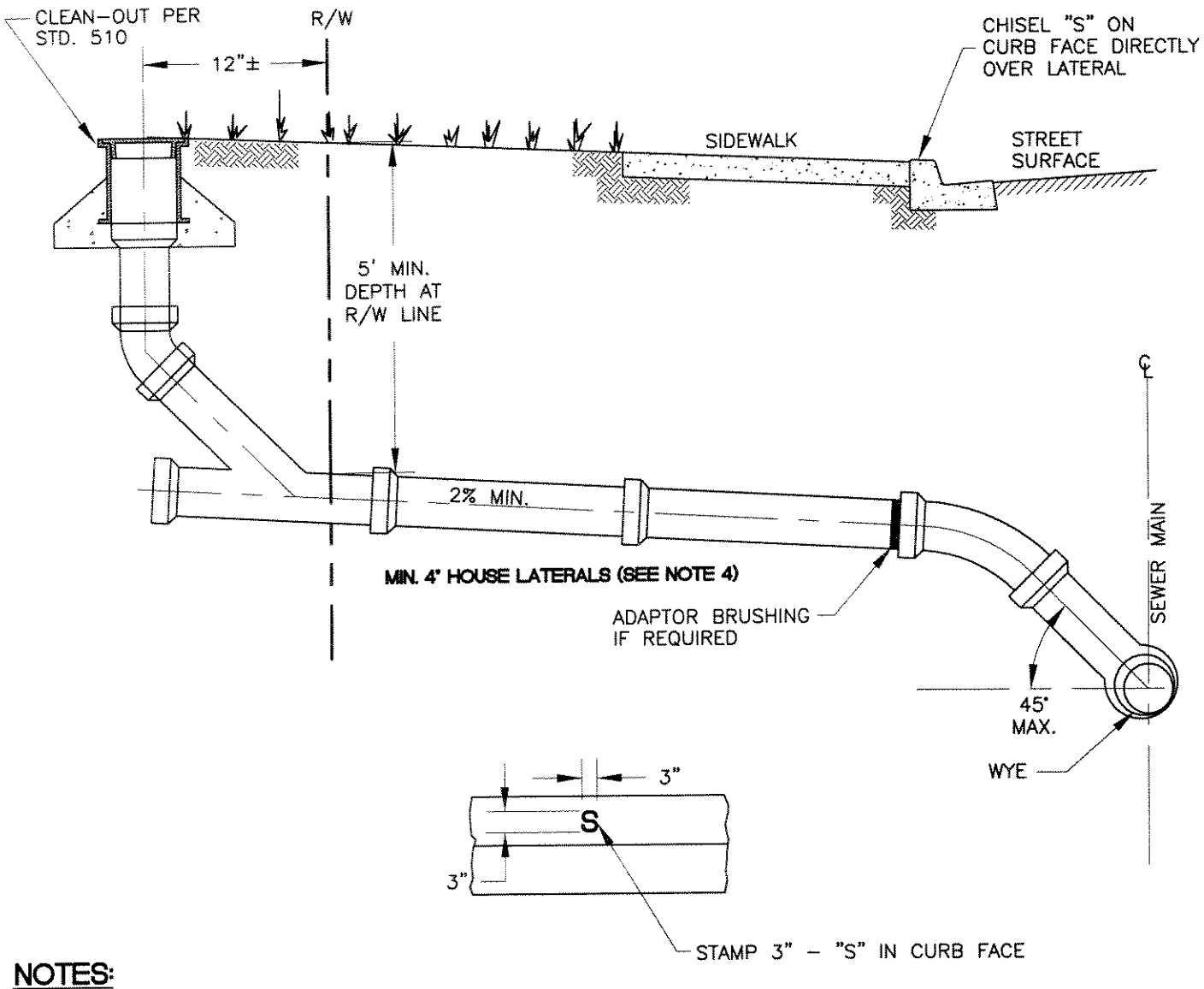

NOTES:

1. LATERALS SHALL BE LAID 90 DEGREES TO MAIN.
2. MINIMUM SLOPE IS ¼"/FT, OR 2%. ANY VARIANCE MUST BE APPROVED BY THE CITY ENGINEER.
3. WHEN SEWER CONNECTION IS CONSTRUCTED IN THE VICINITY OF A WATERMAIN, SEE STD. DWG. 400 A & B FOR REQUIREMENTS.
4. MINIMUM 6" LATERAL IS REQUIRED FOR INDUSTRIAL AND MAJOR COMMERCIAL DEVELOPMENT (VCP).
5. LATERALS SHALL NOT BE CONSTRUCTED BENEATH A DRIVEWAY APPROACH.
6. ALL LATERALS SHALL BE VCP BELL AND SPIGOT.

REVISION	NO:	BY:	DATE:	NO:	BY:	DATE:

12/16/04

APPROVED: Joseph D. Schenk 24039
CITY ENGINEER RCE

Drawn By: LJA Date: 3/19/04

SEWER SADDLE AND LATERALS

Std. Dwg. No. **500A**
Sheet 1 of 1

CITY of NORCO STANDARD DRAWING

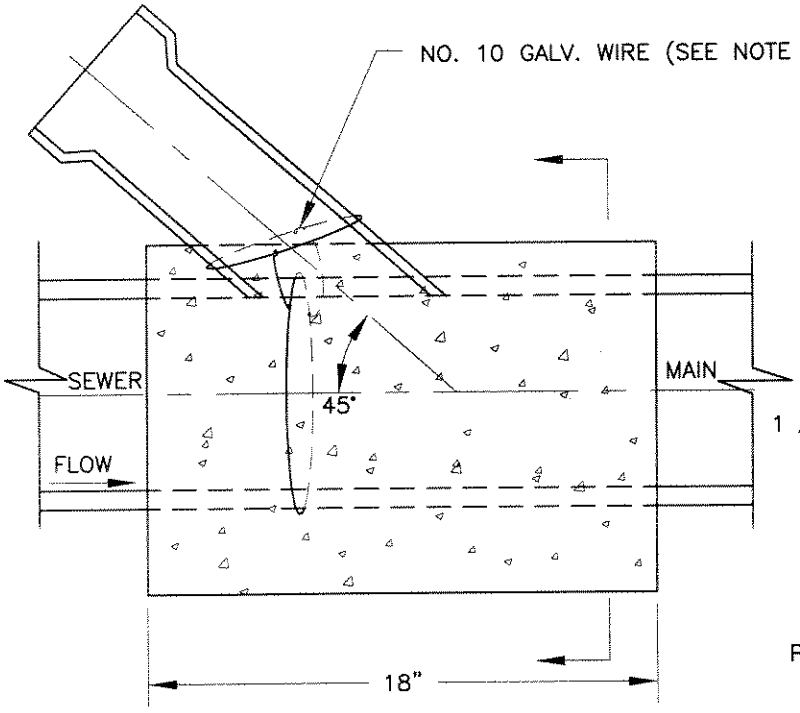

PLAN VIEW

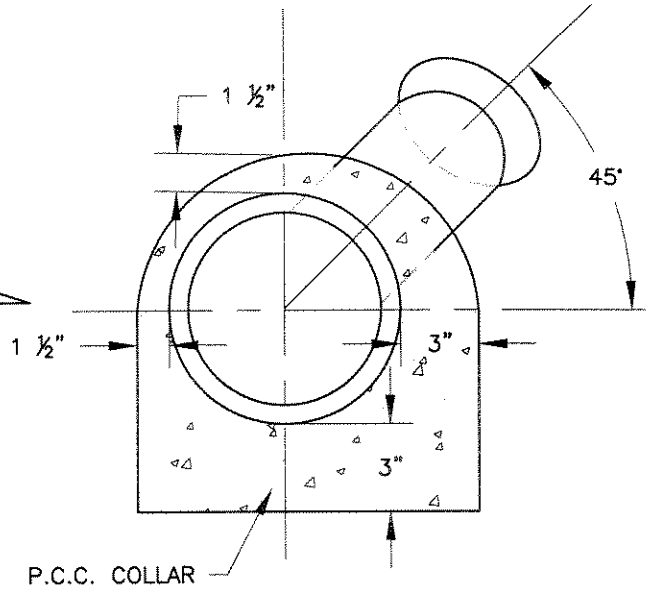

SECTION A-A

NOTES:

1. STUB SHALL BE SECURED TO SEWER MAIN WITH #10 GALVANIZED WIRE AND EPOXY DURING CONSTRUCTION OF P.C.C. COLLAR.
2. MAIN LINE SHALL BE BROKEN OUT FOR SADDLE, ONLY DURING THE PRESENCE OF THE PUBLIC WORKS INSPECTOR.
3. CONCRETE SHALL BE CLASS 560-C-3250.
4. NEW WYE REQUIRED WHEN DIAMETER OF LATERAL EXCEEDS ½ DIAMETER OF MAIN LINE PIPE.

REVISION	NO:	BY:	DATE:	NO:	BY:	DATE:

12/22/04

APPROVED: Ralph S. Schenk 24039
CITY ENGINEER RCE

Drawn By: LJA Date: 3/19/04

SEWER SADDLE AND LATERALS

Std. Dwg. No. 500B
Sheet 1 of 1

CITY of NORCO STANDARD DRAWING

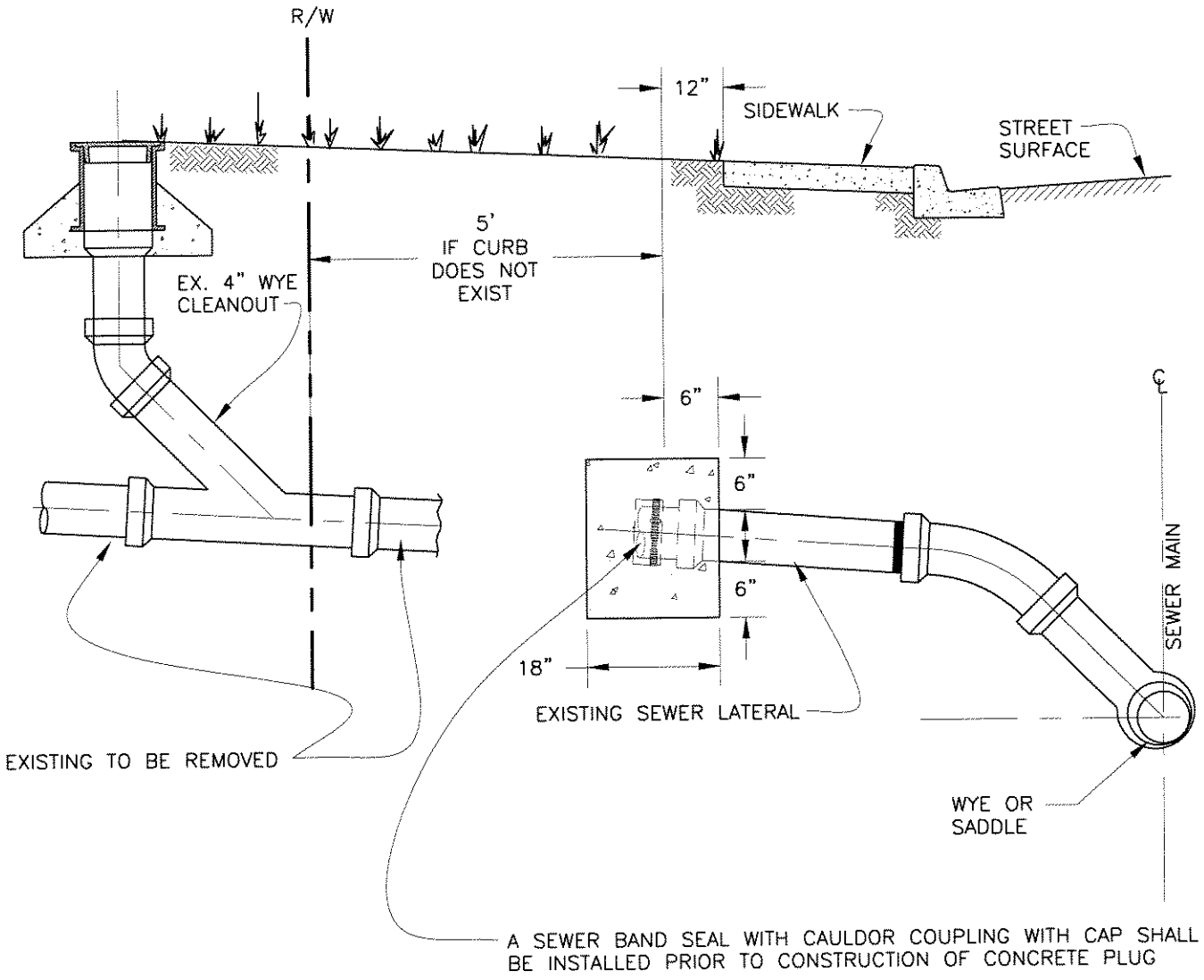

REVISION NO:	BY:	DATE:	NO:	BY:	DATE:

1/4/05

APPROVED: Joseph S. Schenk 24039
CITY ENGINEER RCE

Drawn By: LJA Date: 01/04/05

SEWER LATERAL ABANDONMENT

Std. Dwg. No. **505**
Sheet 1 of 1

CITY of NORCO STANDARD DRAWING

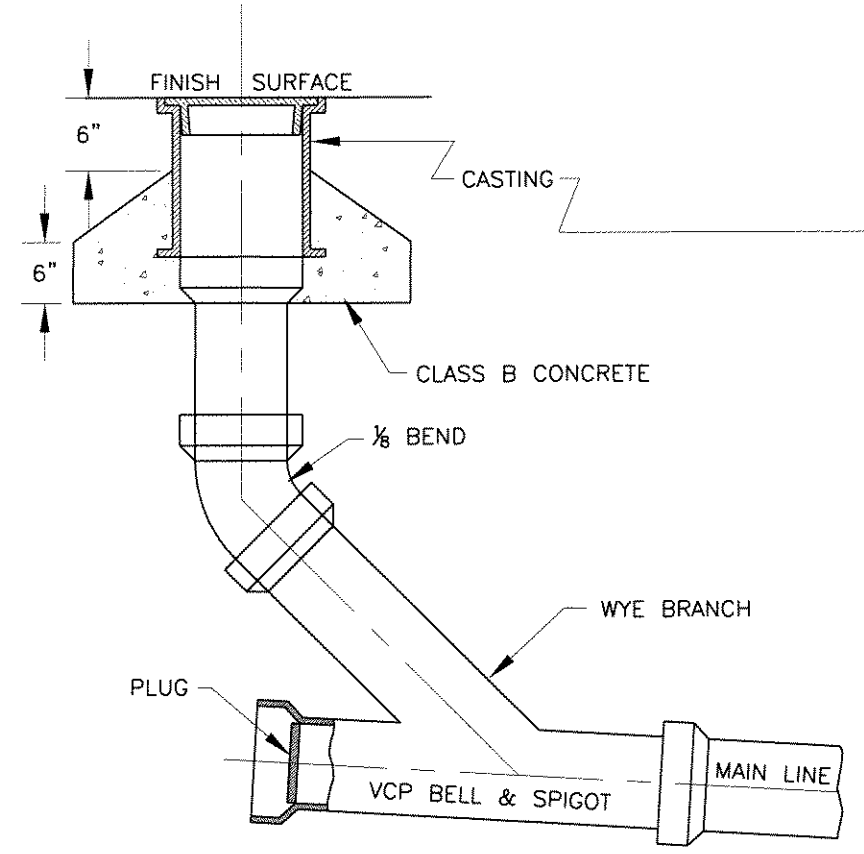

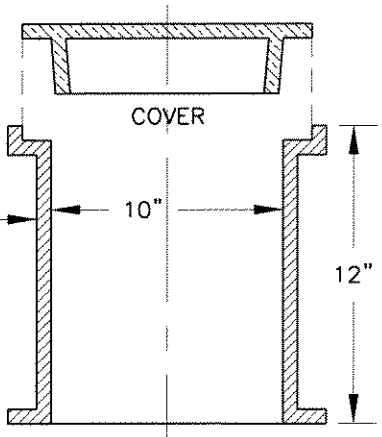

ENLARGED SIDE VIEW

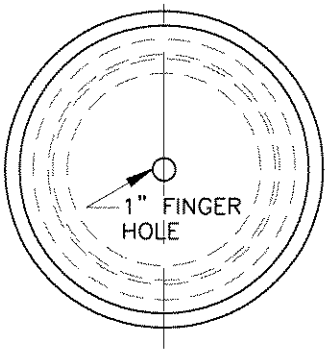

ENLARGED TOP VIEW

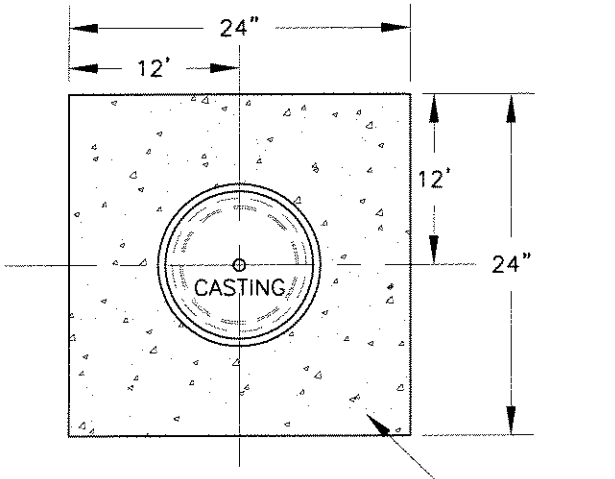

TOP VIEW

NOTES:

1. CLEAN-OUT PIPE MUST BE SAME DIAMETER AS MAIN LINE SEWER.
2. CASTING SHALL BE ALHAMBRA FOUNDARY NUMBER A-1240 OR EQUAL.
3. MAXIMUM DISTANCE BETWEEN SEWER MANHOLE AND TERMINAL CLEAN-OUT SHALL BE 150 FEET AND THERE SHALL BE NO MORE THAN 3 LATERALS BETWEEN TERMINAL CLEAN-OUT AND SEWER MANHOLE.

REVISION	NO:	BY:	DATE:	NO:	BY:	DATE:

1/4/05

APPROVED: Joseph S. Schenk 24039
CITY ENGINEER RCE

Drawn By: LJA Date: 01/04/05

SEWER TERMINAL CLEAN-OUT

Std. Dwg. No. 510
Sheet 1 of 1

CITY of NORCO STANDARD DRAWING

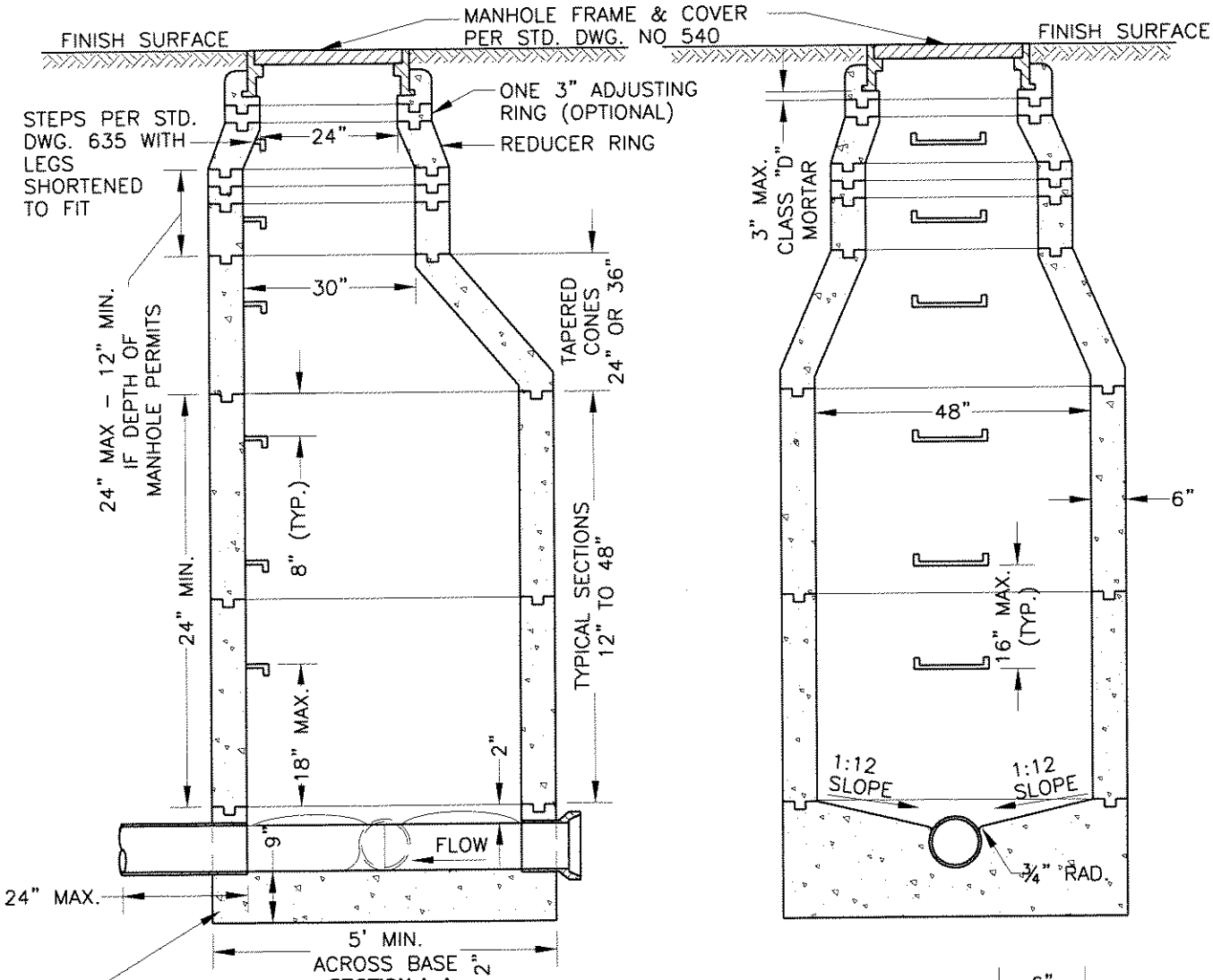

SECTION A-A

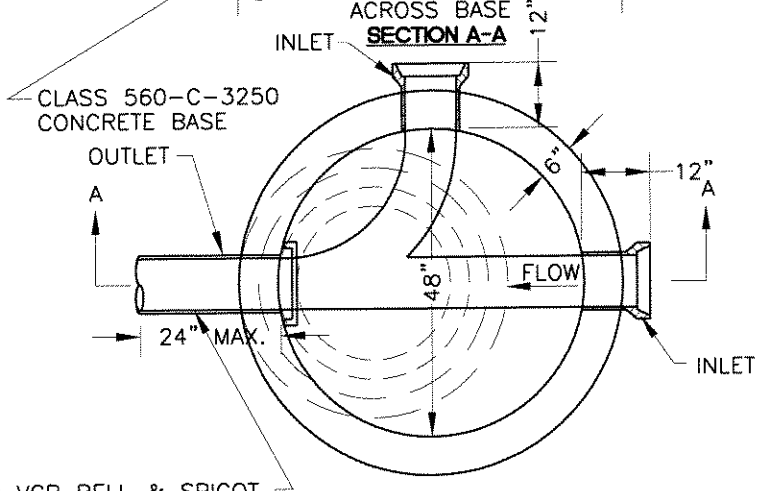

PLAN VIEW
MANHOLE BASE

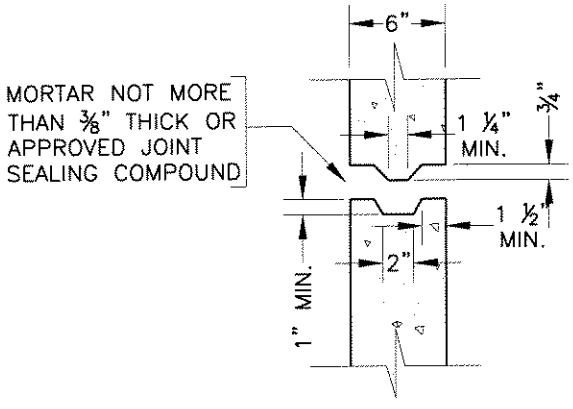

JOINT DETAIL
NON-REINFORCED

REVISION	NO:	BY:	DATE:	NO:	BY:	DATE:

1/25/05

APPROVED: Joseph D. Schenk 24039
CITY ENGINEER RCE

Drawn By: LJA Date: 01/19/05

PRECAST CONCRETE MANHOLE

Std. Dwg. No.
515
Sheet 1 of 2

CITY of NORCO STANDARD DRAWING

NOTES:

1. CONCRETE BASE, SHELF & CHANNEL SHALL BE POURED IN ONE OPERATION TO A POINT 2" ABOVE THE INLET AND OUTLET PIPES.
2. NO PORTION OF THE PIPE SHALL EXTEND INTO THE INSIDE OF THE MANHOLE.
3. INSIDE JOINTS SHALL BE NEATLY STRUCK & POINTED & SHALL NOT EXCEED ⅜" THICKNESS.
4. NON-REINFORCED PRECAST MANHOLES SHALL NOT BE USED UNLESS PRIOR APPROVAL IS GRANTED BY THE CITY ENGINEER.
5. THE BASE FOR MANHOLES UNDER 15' IN DEPTH SHALL BE 9" THICKNESS; OVER 15' SHALL BE 12" THICKNESS; CLASS 560-C-3250 PORTLAND CEMENT CONCRETE.
6. THE TOP STEP SHALL BE PLACED A MINIMUM 12" ABOVE THE TOP OF CONE SECTION.
7. STEPS SHALL BE PER STD. DWG. NO. 635. THE MANHOLE STEPS SHALL BE UNIFORMLY SPACED AT A MAXIMUM OF 16". THE LOWEST STEP SHALL BE PLACED NOT LESS THAN 8" NOR MORE THAN 18" ABOVE THE SHELF.
8. RISER SECTIONS MAY BE REINFORCED OR UNREINFORCED. REINFORCED SECTIONS SHALL BE REINFORCED IN ACCORDANCE WITH ASTM C 478.
9. THE 24" x 48" ECCENTRIC CONES MAY BE REINFORCED OR UNREINFORCED. THE WALL THICKNESS SHALL NOT BE LESS THAN 6".
10. JOUNTS SHALL BE TONGUE AND GROOVE. JOINTS FOR REINFORCED STRUCTURES SHALL CONFORM WITH ASTM C 478 SECTION 14.
11. PRECAST UNITS SHALL BE ASSEMBLED USING CLASS "B" MORTAR.
12. IF 30" DIAMETER MANHOLE FRAME AND COVER IS REQUIRED, IT SHALL BE INSTALLED WHERE THE REDUCER RING IS SHOWN IN THE SECTION.
13. FOR REINFORCED PRECAST STRUCTURES, ALL REINFORCEMENT SHALL HAVE A MINIMUM OF 2" OF COVER OVER THE STEEL ON THE INSIDE FACE.
14. THE TOP OPENING OF THE MANHOLE AND THE STEPS SHALL BE PLACED DIRECTLY OVER THE OUTLET OF THE STRUCTURE EXCEPT AS OTHERWISE NOTED ON PLANS.

REVISION	NO:	BY:	DATE:	NO:	BY:	DATE:

1/25/05

APPROVED: Joseph S. Schenk 24039
CITY ENGINEER RCE

Drawn By: LJA Date: 01/19/05

PRECAST CONCRETE MANHOLE

Std. Dwg. No. 515
Sheet 2 of 2

CITY of NORCO STANDARD DRAWING

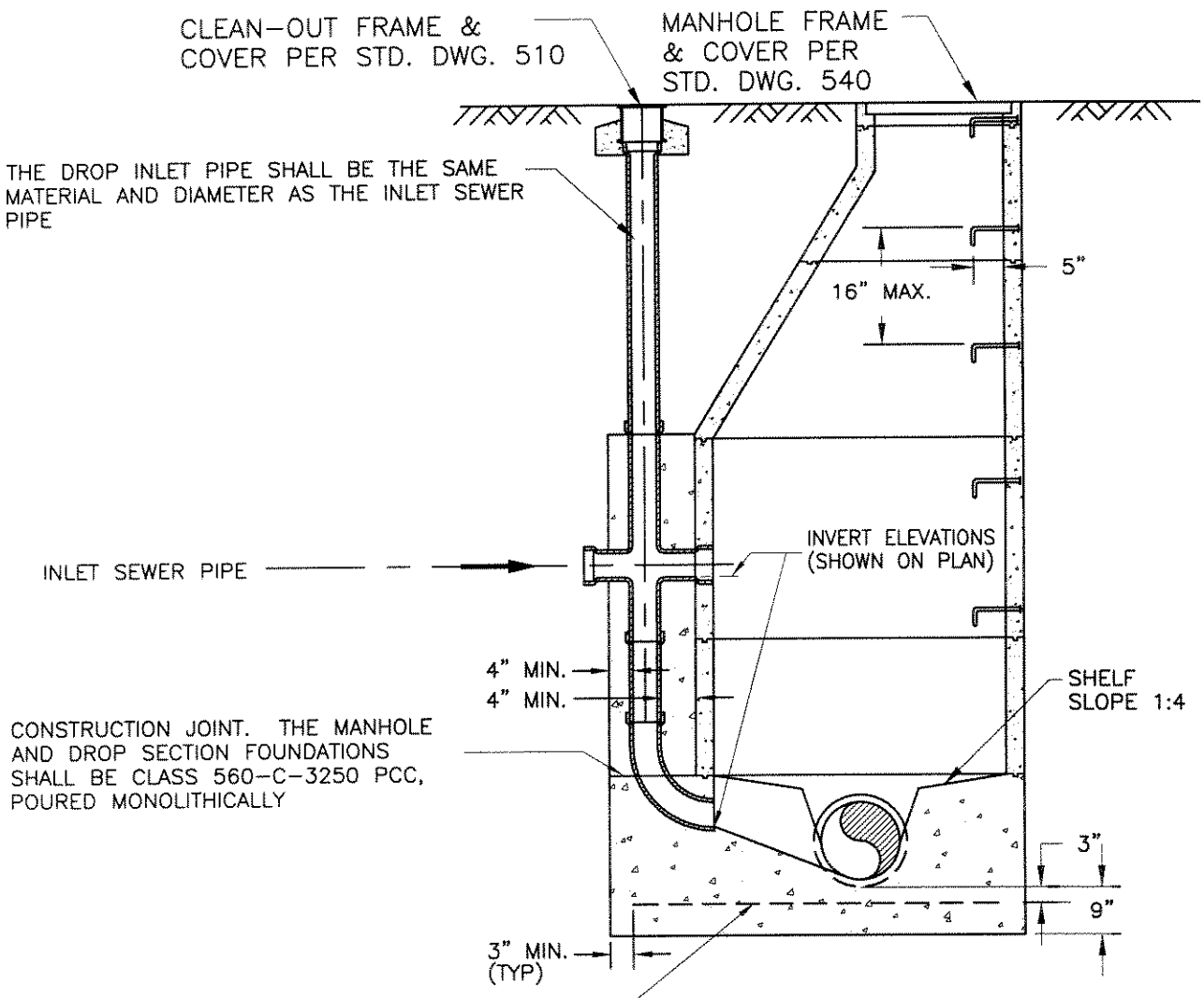

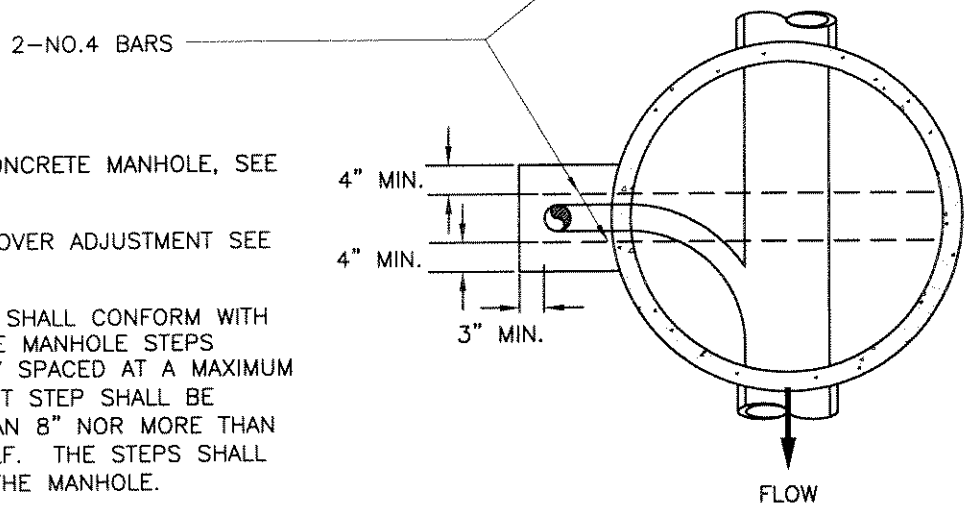

NOTE:

1. FOR PRECAST CONCRETE MANHOLE, SEE STD. DWG. 515.

2. FOR MANHOLE COVER ADJUSTMENT SEE STD. DWG. 535.

3. MANHOLE STEPS SHALL CONFORM WITH STD. DWG. 635. THE MANHOLE STEPS SHALL BE UNIFORMLY SPACED AT A MAXIMUM OF 16". THE LOWEST STEP SHALL BE PLACE NOT LESS THAN 8" NOR MORE THAN 18" ABOVE THE SHELF. THE STEPS SHALL PROJECT 5" INSIDE THE MANHOLE.

REVISION	NO:	BY:	DATE:	NO:	BY:	DATE:

12/22/04

APPROVED: Joseph S. Schenk 24039
CITY ENGINEER RCE

Drawn By: LJA Date: 3/19/04

SEWER MANHOLE DROP INLET

Std. Dwg. No. **520**
Sheet 1 of 1

CITY of NORCO STANDARD DRAWING

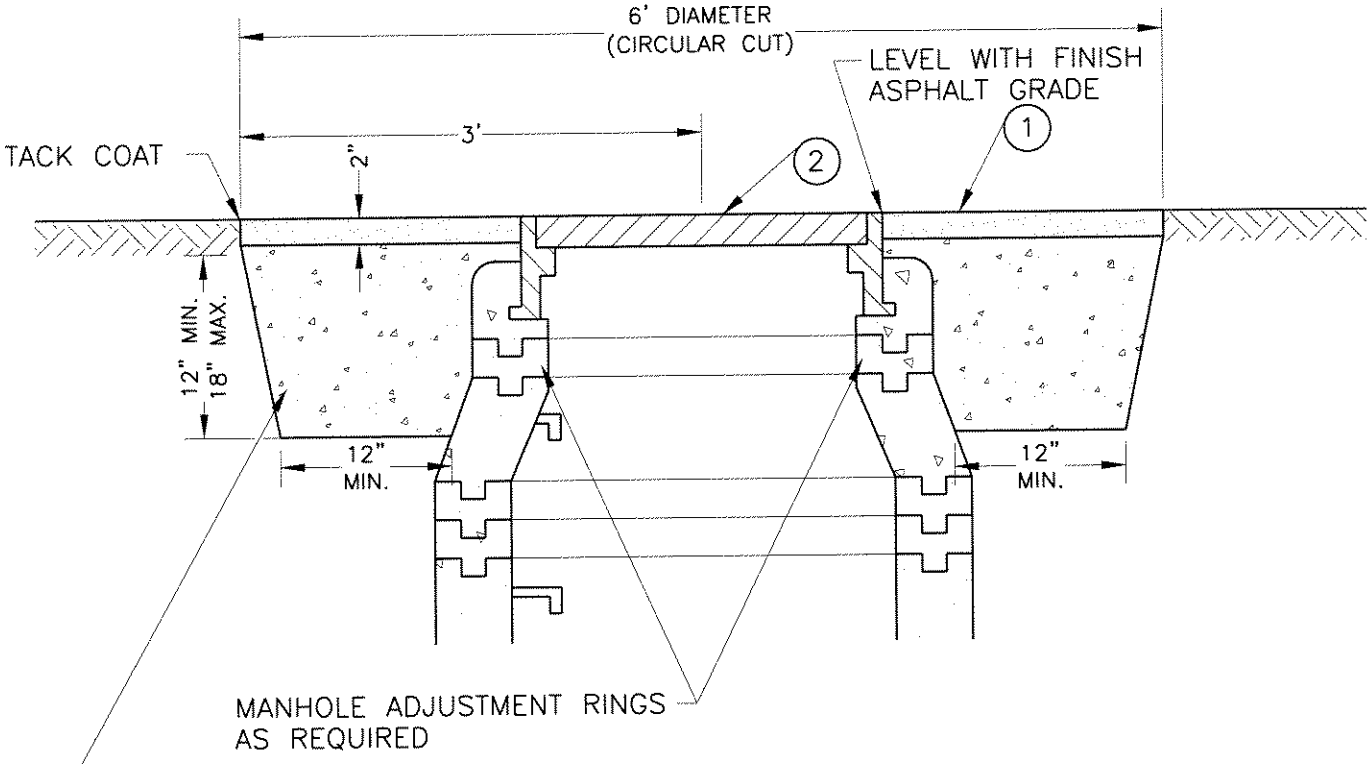

P.C.C. PAVING RING, CLASS 560-C-3250, TO BE PLACED SAME DAY AS EXCAVATION.

(1) CLASS D2-AR-4000 ASPHALTIC CONCRETE PLACED NO LATER THAN 72 HOURS AFTER COVER HAS BEEN RAISED TO GRADE.

(2) STANDARD MANHOLE FRAME AND COVER PER STD. DWG. NO. 540.

NOTES:

1. DURING ROUGH GRADING OF STREET, SEWER MANHOLE FRAME AND COVER TO BE SET 6" BELOW SUBGRADE BEFORE FINAL PAVING.
2. SEWER MANHOLE FRAME AND COVER TO BE ADJUSTED AFTER PLACEMENT OF FINAL A.C. PAVEMENT. PAVEMENT REPAIRS TO BE MADE PER THIS DETAIL AFTER RAISING TO GRADE.
3. RESET TOP STEP IN MANHOLE AT THE TIME FRAME AND COVER ARE RAISED TO GRADE. ADD ADDITIONAL STEPS WHEN NECESSARY TO MAINTAIN PROPER SPACING BETWEEN STEPS.
4. IN UNPAVED AREAS MANHOLE FRAME AND COVER SHALL BE PLACED 6" ABOVE GROUND WITH 12" WIDE CONCRETE COLLAR.

REVISION	NO:	BY:	DATE:	NO:	BY:	DATE:

1/26/05

APPROVED: Joseph A. Schenk 24039
CITY ENGINEER RCE

Drawn By: LJA Date: 01/26/05

MANHOLE COVER ADJUSTMENT

Std. Dwg. No. **535**
Sheet 1 of 1

CITY of NORCO STANDARD DRAWING

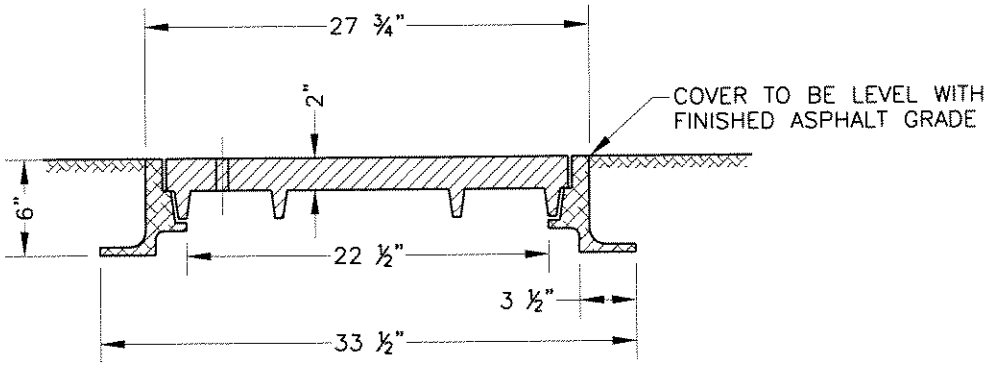

SECTION VIEW OF RING AND COVER

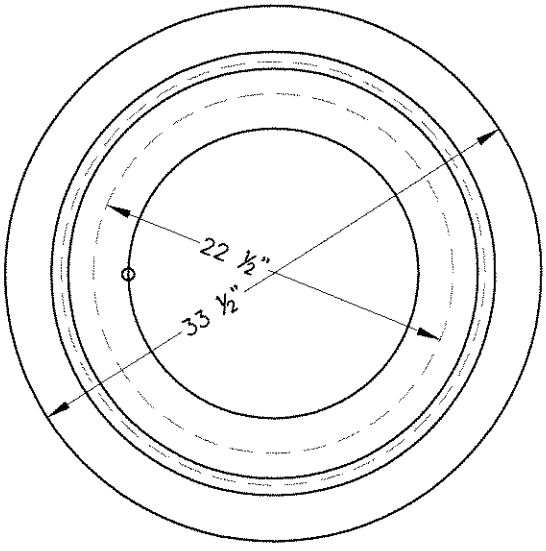

PLAN OF RING

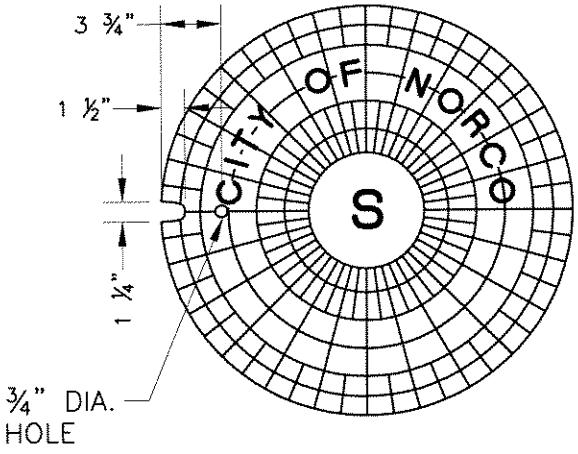

PLAN OF COVER

NOTES:

1. MANHOLE FRAME AND COVER SHALL BE ALHAMBRA FOUNDRY CO. NO. A-1170 OR EQUAL.
2. MANHOLE FRAME AND COVER CASTING SHALL CONFORM TO CLASS 30 SERIAL NO. A-48 OF A.S.T.M.
3. MANHOLE COVER MARKINGS SHALL SAY CITY OF NORCO.

REVISION	NO:	BY:	DATE:	NO:	BY:	DATE:

1/20/05

APPROVED: Joseph S. Schenk 24039
CITY ENGINEER RCE

Drawn By: LJA Date: 01/12/05

SEWER MANHOLE FRAME and COVER

Std. Dwg. No. **540**
Sheet 1 of 1

600
MISCELLANEOUS STANDARDS

CITY of NORCO STANDARD DRAWING

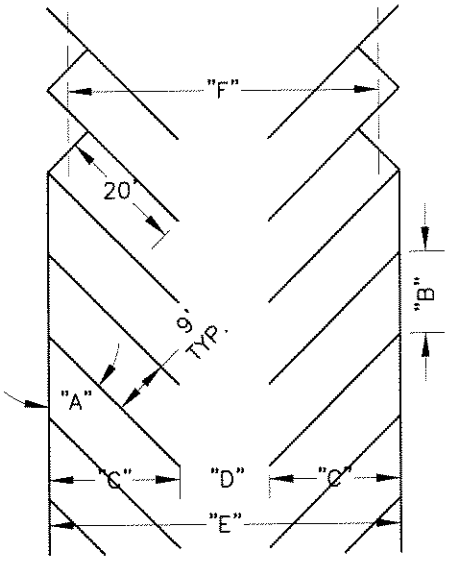

TABLE OF MINIMUM DIMENSIONS:

ANGLE "A"	CURB LENGTH "B"	STALL LENGTH "C"	AISLE "D"	BAY WIDTH "E"	INTERLOCK BAY WIDTH "F"
30°	18'	17'-10"	12'	47'-8"	39'
40°	14'	19'-9"	13'	52'-6"	45'-7"
45°	12'-9"	20'-6"	14'	55'	48'-8"
50°	11'-9"	21'-1"	15'	57'-2"	51'-5"
60°	10'-5"	21'-10"	18'	61'-8"	57'-2"
90°	9'	20'	25'	65'	65'

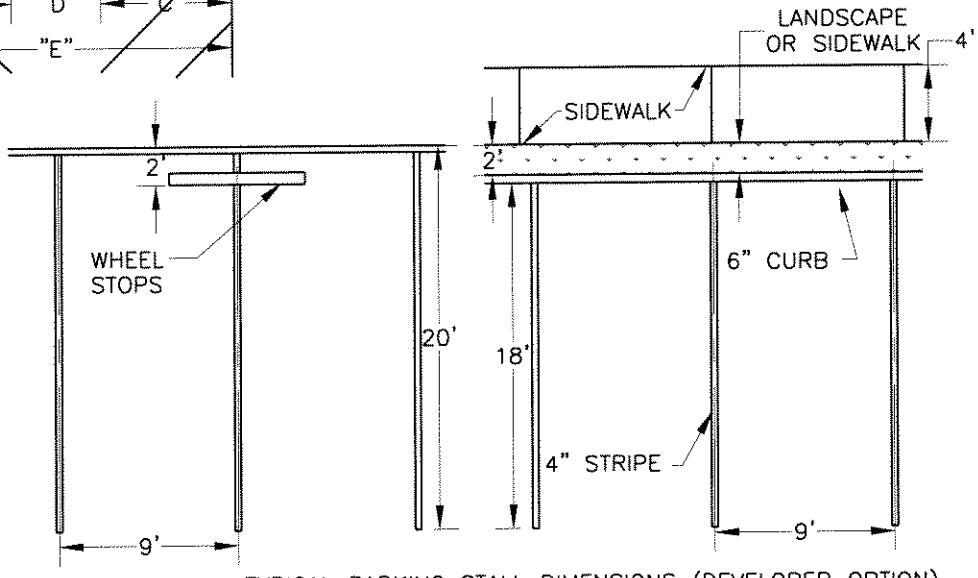

TYPICAL PARKING STALL DIMENSIONS (DEVELOPER OPTION)

GENERAL NOTES:

1. BUMPER BLOCKS ARE REQUIRED TO BE PROVIDED ON ALL PARKING SPACES ABUTTING A PROPERTY LINE UNLESS OPTION IS CHOSEN. IN NO CASE SHALL VEHICLES EXTEND OVER THE PUBLIC SIDEWALK OR PROPERTY LINES.

2. NO PARKING SPACE SHALL BE LOCATED WHERE IT WOULD BE NECESSARY FOR THE DRIVER TO BACK UP ACROSS A PUBLIC SIDEWALK.

3. IF DEVELOPER OPTION IS SELECTED, CAR OVERHANG MAY NOT BE COUNTED AS REQUIRED LANDSCAPING AREA OR SIDEWALK.

4. DIMENSIONS OF SPECIAL TYPES OF PARKING SPACES (OR REFER TO NORCO MUNICIPAL CODE SECTION 18.38):
   - PARALLEL PARKING SPACE – 10-FT x 26-FT;
   - LOADING SPACE – 12-FT x 25-FT WITH 15-FT VERTICAL CLEARANCE;
   - HANDICAPPED SPACE – MINIMUM REQUIREMENTS SET IN CALIFORNIA BUILDING CODE, CURRENT EDITION;
   - SPACES ADJACENT TO WALL OR RAISED PLANTER OVER 18-INCH IN HEIGHT – 12-FT x 20-FT.

REVISION	NO:	BY:	DATE:	NO:	BY:	DATE:

1/6/05

APPROVED: Joseph S. Schenk 24039
CITY ENGINEER RCE

Drawn By: LJA Date: 01/03/05

PARKING LOT DESIGN

Std. Dwg. No. **620**
Sheet 1 of 1

CITY of NORCO STANDARD DRAWING

ENCLOSURE FOR DOUBLE BINS

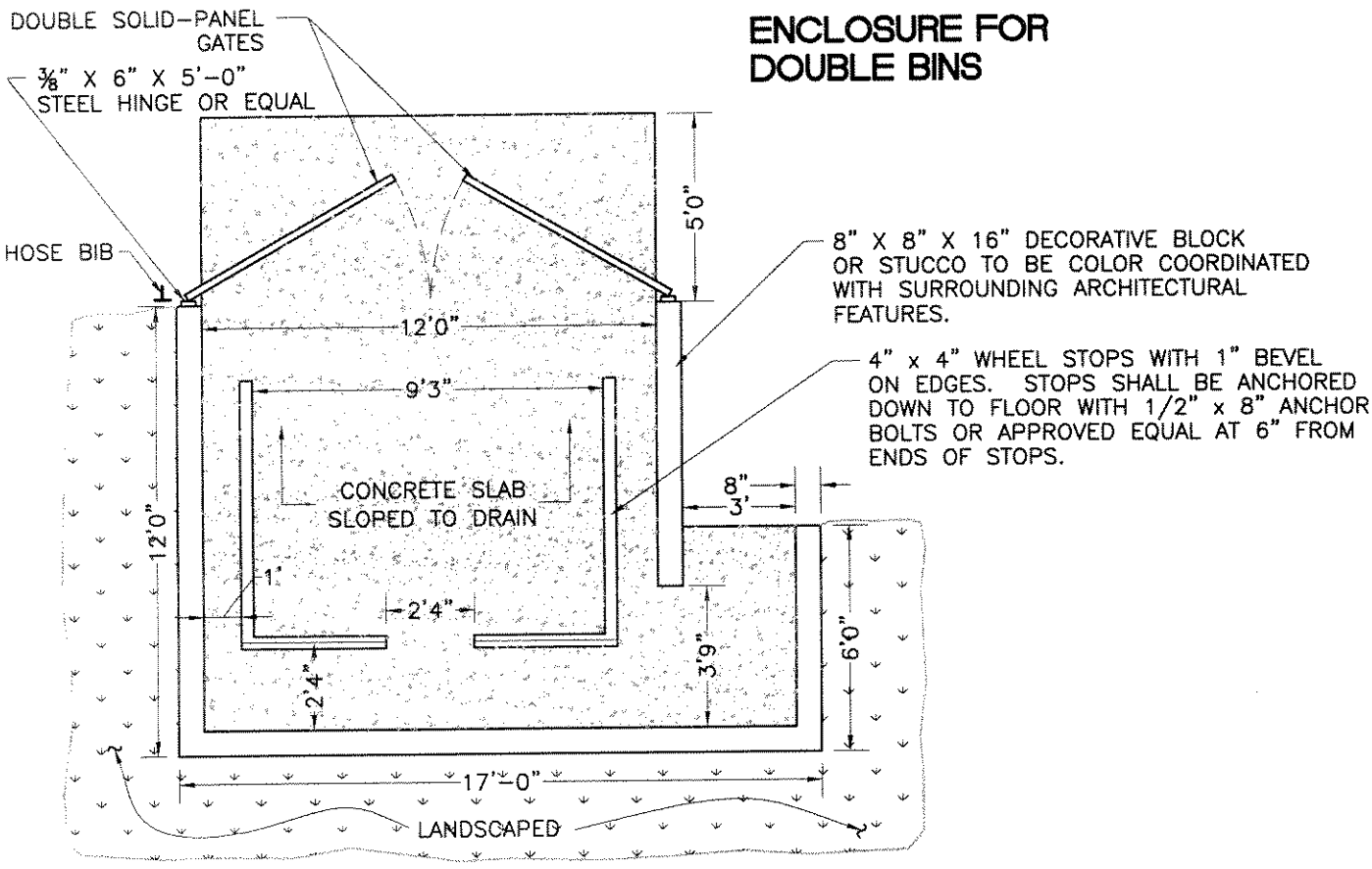

ENCLOSURE FOR SINGLE BINS

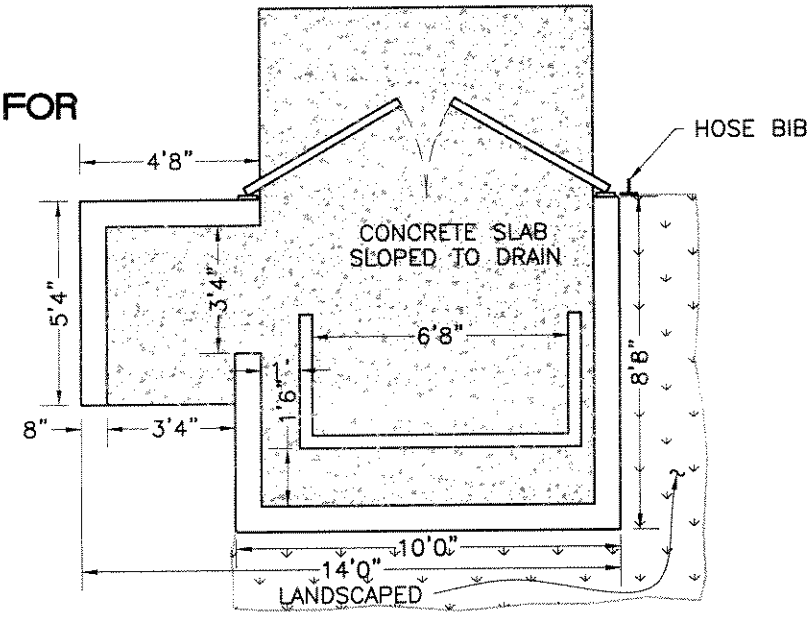

REVISION	NO:	BY:	DATE:	NO:	BY:	DATE:

12/22/04

APPROVED: Joseph S. Schenk 24039
CITY ENGINEER RCE

Drawn By: LJA Date: 3/19/04

TRASH ENCLOSURE

Std. Dwg. No. **630**
Sheet 1 of 2

CITY of NORCO STANDARD DRAWING

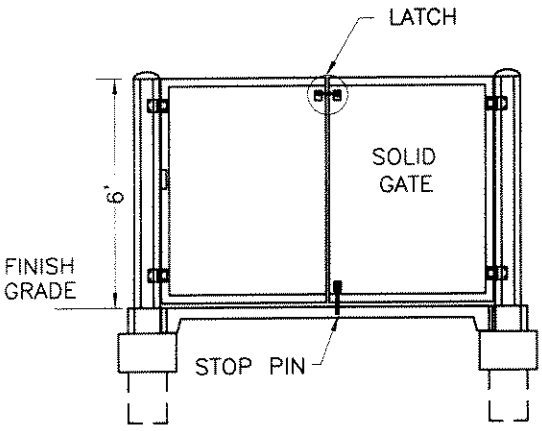

FRONT ELEVATION

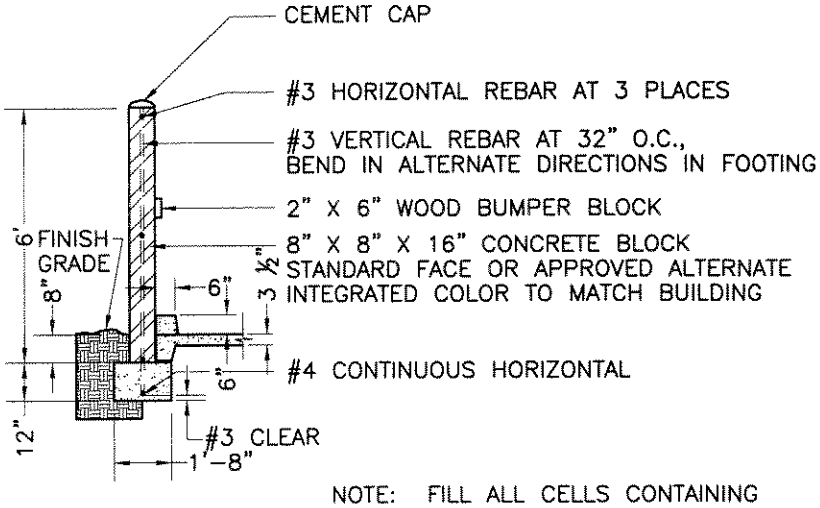

NOTE: FILL ALL CELLS CONTAINING REINFORCEMENT WITH GROUT.

SCREEN WALL
SECTION A-A

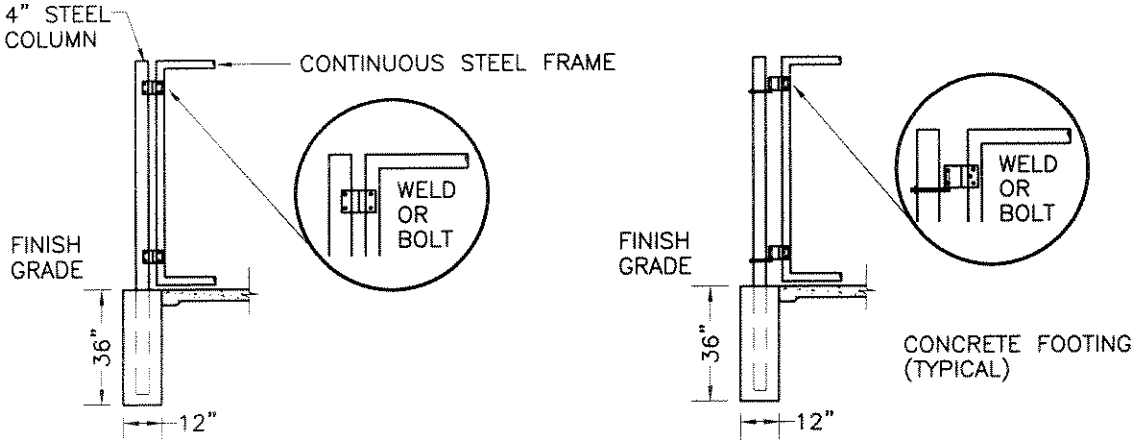

GATE CONSTRUCTION ALTERNATIVES

REVISION	NO:	BY:	DATE:	NO:	BY:	DATE:

Drawn By: LJA Date: 3/19/04

12/22/04
APPROVED: Joseph S. Schenk 24039
CITY ENGINEER RCE

TRASH ENCLOSURE (Details)

Std. Dwg. No. 630
Sheet 2 of 2

CITY of NORCO STANDARD DRAWING

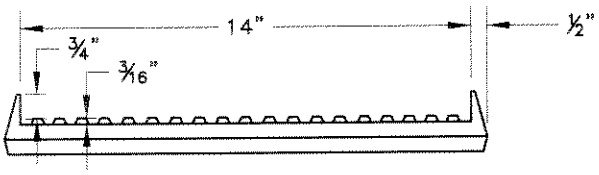

FRONT

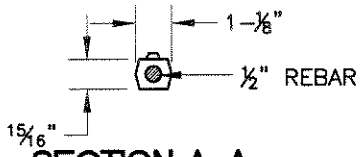

SECTION A-A

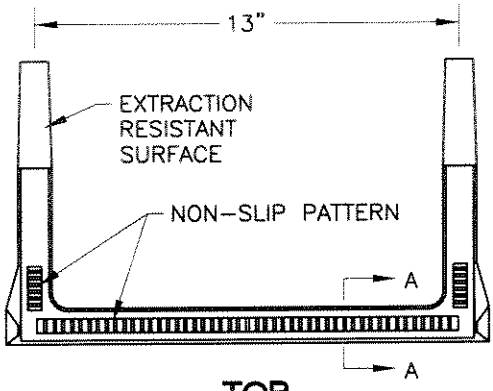

TOP

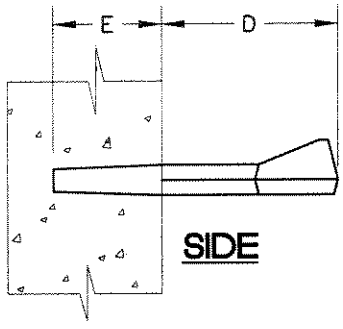

SIDE

NOTES:

1. STEPS SHALL BE STEEL-REINFORCED COPOLYMER POLYPROPYLENE PLASTIC CONFORMING TO:
   (A) ASTM D478 AND C497, EXCEPT THAT THE MINIMUM HORIZONTAL PULLOUT LOAD SHALL BE 1500 LBS.
   (B) ASTM A615 GRADE 60 DEFORMED REINFORCING STEEL BAR.
   (C) CALIFORNIA CODE OF REGULATIONS TITLE 8, GENERAL INDUSTRY SAFETY ORDERS.

2. STEPS SHALL BE CAPABLE OF WITHSTANDING AN IMPACT LOAD OF 70 FT-LBS AT 20°F WITHOUT CRACKING OR FRACTURING.

3. THE MINIMUM TOTAL CROSS-SECTIONAL AREA OF THE EXPOSED PORTION OF THE STEP, INCLUDING THE DEFORMED STEEL BAR AND EXCLUDING THE NON-SLIP TREAD SURFACE, SHALL BE 1.0 SQ. IN.

4. THE ENTIRE POLYPROPYLENE PLASTIC MATERIAL SURROUNDING THE REINFORCING STEEL BAR SHALL BE CAST MONOLITHICALLY. MINIMUM COVER SHALL BE 3/16".

5. A CERTIFICATION OF COMPLIANCE WITH THE REQUIREMENTS OF NOTES 1 THROUGH 4 PREPARED BY AN INDEPENDENT CERTIFIED LABORATORY SHALL BE SUBMITTED TO THE ENGINEER CONCURRENTLY WITH A REQUEST FOR APPROVAL.

6. E=3-⅜". FOR VAULTS AND MANHOLES, D=5-½". FOR OTHER INSTALLATIONS, D=7-½". THESE DIMINSIONS MAY BE PLUS OR MINUS ¼".

7. STEPS SHALL BE EVENLY SPACED. MAXIMUM VERTICAL SPACING OF STEPS SHALL BE 16", WITH THE BOTTOM STEP A MAXIMUM OF 2' ABOVE FLOOR OR SHELF.

8. IF TAPERED STEPS ARE INSTALLED INTO STRAIGHT DRILLED OR FORMED HOLES, APPROVED NON-SHRINK GROUT SHALL BE INJECTED INTO THE HOLE PRIOR TO INSTALLATION. HOLES SHALL BE STRAIGHT AND PARALLEL. EXCEPT AS OTHERWISE NOTED, STEPS SHALL BE INSTALLED IN ACCORDANCE WITH MANUFACTURER'S RECOMMENDED PROCEDURES.

9. A DROP STEP WITH A MINIMUM DROP OF ¾" MAY BE USED. THE DROP STEP SHALL MEET ALL OTHER CRITERIA OF THIS PLAN.

REVISION	NO:	BY:	DATE:	NO:	BY:	DATE:

12/22/04

APPROVED: Joseph A. Schenk 24039
CITY ENGINEER RCE

Drawn By: LJA Date: 03/29/02

MANHOLE STEPS for SEWER MANHOLES

Std. Dwg. No. 635
Sheet 2 of 2

CITY of NORCO STANDARD DRAWING

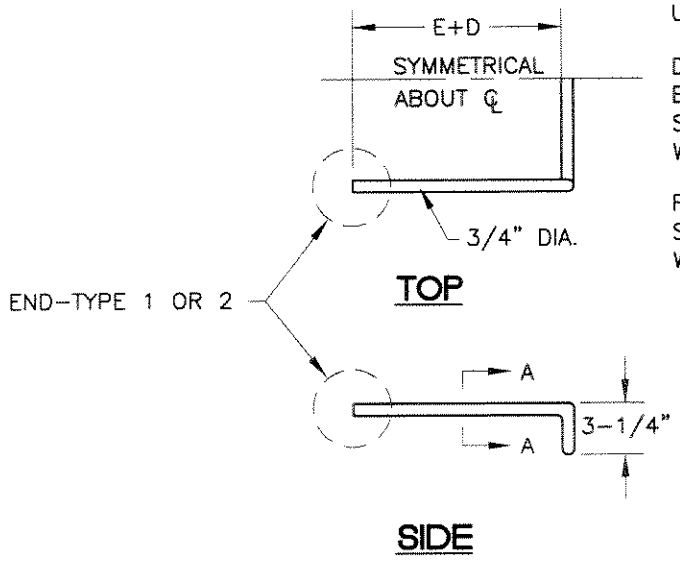

UNLESS OTHERWISE NOTED:

D = 7"
E = 6" OR T–1", WHICHEVER IS LESS; MINIMUM E IS 3"
S = 12" MAX., EVENLY SPACE
W = 16" MIN.

FOR MANHOLES AND UNDERGROUND VAULTS:
S = 16" MAX., EVENLY SPACED
W = 14" MIN.

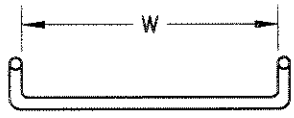

SECTION A-A

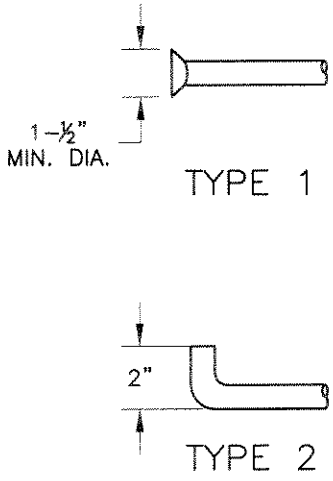

END DETAILS - SIDE VIEW

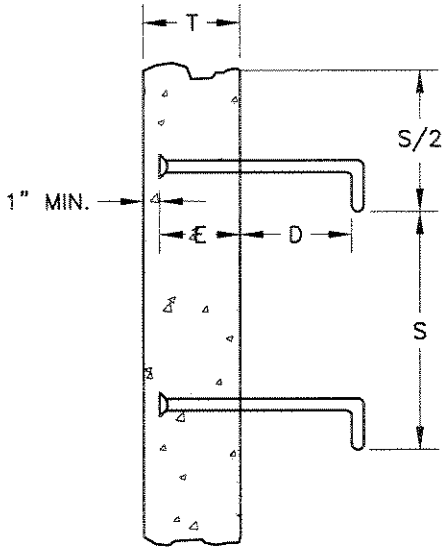

INSTALLATION DETAIL

NOTES:

1. STEPS SHALL BE STEEL CONFORMING TO ASTM A307 AND SHALL BE GALVANIZED AFTER FABRICATION.
2. IF STAINLESS STEEL STEPS ARE REQUIRED, THE MATERIAL SHALL CONFORM TO ASTM A276, 300 SERIES.
3. STEP ENDS MAY BE TYPE 1 OR 2, AS SHOWN.
4. BOTTOM STEP SHALL BE A MAXIMUM OF 2' ABOVE FLOOR OR SHELF.
5. STEPS WITH TYPE 1 END MAY BE CAST IN PLACE, OR PLACED IN THE CENTER OF 1–½" MIN. DIA DRILLED OR FORMED HOLES AND SET WITH HIGH STRENGTH NON–SHRINK GROUT, 6000 PSI MIN. STEPS WITH TYPE 2 ENDS SHALL BE CAST IN PLACE.

REVISION	NO:	BY:	DATE:	NO:	BY:	DATE:

12/22/04
APPROVED: Joseph S. Schenk 24039
CITY ENGINEER RCE

Drawn By: LJA Date: 3/19/04

MANHOLE STEPS for STORM DRAIN MANHOLES

Std. Dwg. No. 635
Sheet 1 of 2

700
TRAIL
STANDARDS

CITY of NORCO STANDARD DRAWING

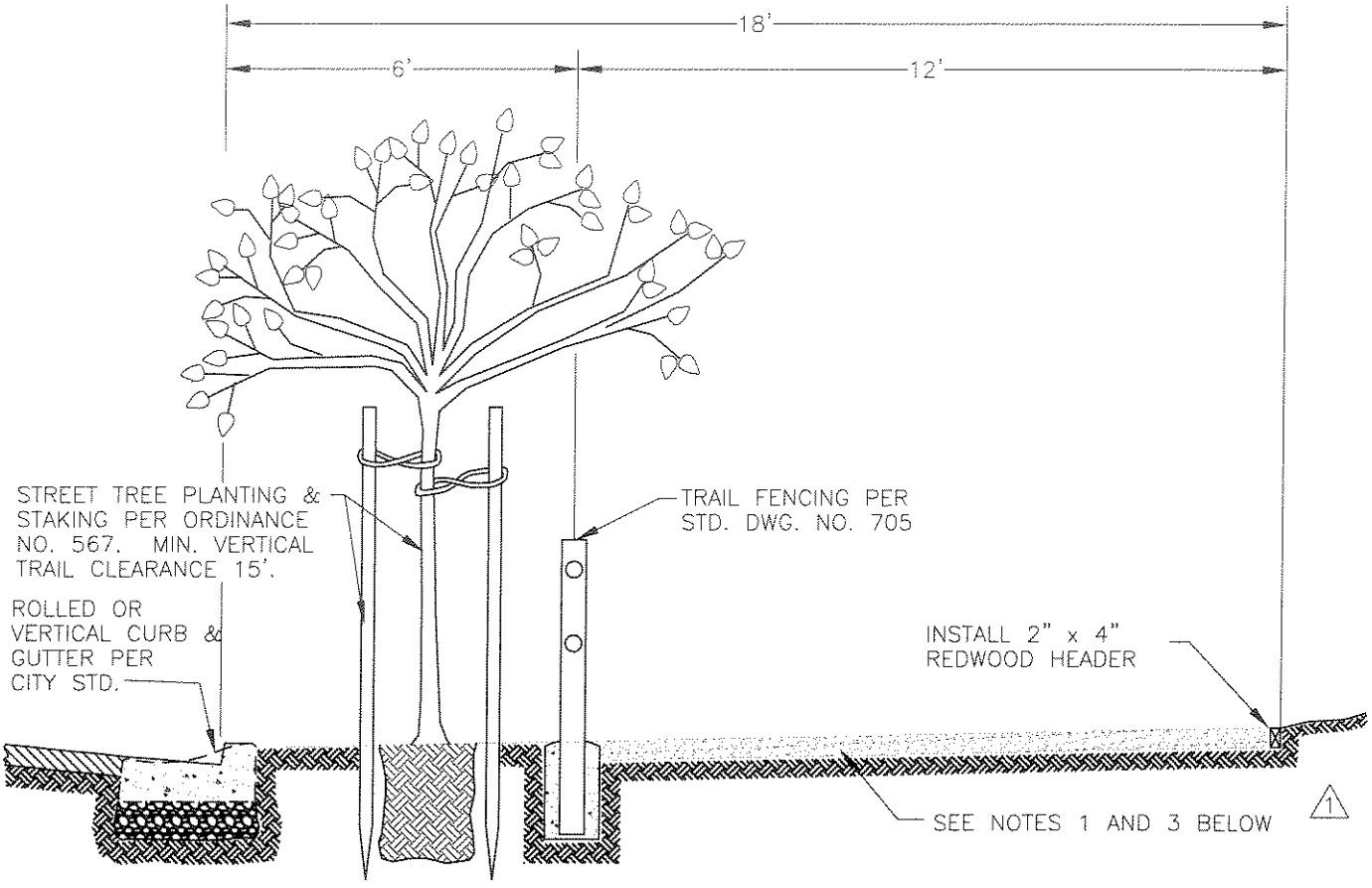

NOTES:

1. TRAIL MATERIAL (4" THICK) SHALL BE COMPACTED IN PLACE TO 95% WITH THE UPPER ONE FOOT OF SUBGRADE COMPACTED TO 95%, AND SHALL CONSIST OF DECOMPOSED GRANITE, SLAG OR STEEL SLAG WITH A MORE OR LESS EQUAL GRADATION MIXTURE BETWEEN ½" SIZE MAXIMUM AND NO. 200 SIEVE SIZE MINIMUM.

1 2. REDWOOD HEADER STAKES SHALL BE 1" x 2" x 18" AT 4'–0" O.C. FLUSH WITH TOP OF HEADER.

1 2 3. THE ONLY APPROVED ALTERNATIVE TRAIL MATERIALS ARE THE FOLLOWING:
   A. 2% SOIL CEMENT/DG. SEE SHEET 2 FOR SPECIFICAITONS.
   B. POLYMER COATED CRUSHED STONE PATHWAY MIX. SEE SHEET 3 FOR SPECIFICATIONS.
   C. INTERLOCKING BRICK PAVERS IN DRIVEWAY AREAS ONLY AND CANNOT BE USED IN OTHER PARTS OF THE TRAIL. SEE SHEETS 4 & 5 FOR SPECIFICATION.

REVISION	NO:	BY:	DATE:	NO:	BY:	DATE:
	1	LJA	09/01/05	3	JCW	10/23/07
	2	SLR	03/28/07	4	SRL	02/22/08

Drawn By: LJA Date: 01/03/05

APPROVED: C27172
CITY ENGINEER RCE

EQUESTRIAN TRAIL STANDARD

Std. Dwg. No. 700

Sheet 1 of 6

A. SOIL CEMENT

1. GRADE TRAIL, FILLING ALL RUTS AND ADJUSTING GRADE FOR PROPER WATER FLOW WITH A MINIMUM CROSS SLOPE OF 1% AND A MAXIMUM CROSS SLOPE OF 4%.
2. SPREAD 270 LBS. OF PORTLAND PLASTIC CEMENT OVER 240 SQ. FT. OF TRAIL.
3. ROTO-TIL IN THE CEMENT AND EXISTING DG TRAIL MATERIAL TO A DEPTH OF 4 INCHES OVER THE ENTIRE 240 SQ. FT.
4. RE-GRADE THE AREA ROTO-TILLED AND MIXED. ADD WATER LIGHTLY DURING THIS PROCESS.
5. WHEN THE ENTIRE AREA IS LEVELED, ROLL THE AREA WITH A 3,500 LB. ROLLER ADDING WATER LIGHTLY. THE AREA WILL NEED TO BE ROLLED SEVERAL TIMES FOR PROPER COMPACTION.
6. THE AREA IS TO BE LIGHTLY WATERED SEVERAL TIMES BY HAND OVER THE NEXT SEVERAL HOURS. AVOID OVER-WATERING THAT WOULD CAUSE THE TRAIL TO RUT OR WASH OUT. WATER MUST PENETRATE FOR THE FULL 4 INCHES OF SOIL CEMENT DURING THIS PROCES.
7. THE ENTIRE TRAIL MUST BE SECURED WITH SIGNS AND BARRICADES DURING THE INSTALLATION OF THE SOIL CEMENT AND FOR THE NEXT 24-HOURS AFTER COMPLETION TO ALLOW FOR THE CEMENT TO HARDEN.
8. ALL VEHICLES SHALL BE KEPT OFF THE SOIL CEMENT INCLUDING DRIVEWAYS FOR A FULL 24-HOURS AFTER THE INSTALLATION IS COMPLETE.

REVISION	NO:	BY:	DATE:	NO:	BY:	DATE:
	1	LJA	09/01/05	3	JCW	10/23/07
	2	SLR	03/28/07	4	SRL	02/22/08

Drawn By: LJA Date: 01/03/05

APPROVED: C27172 CITY ENGINEER RCE

EQUESTRIAN TRAIL STANDARD

Std. Dwg. No. 700

1 2 B. POLYMER COATED CRUSHED STONE PATHWAY MIX

1. SUB-GRADE PREPARATION
   A. ALL AREAS SHALL BE COMPACTED TO A MINIMUM OF 90% RELETIVE COMPACTION AND SHALL BE GRADED WITH A MINIMUM CROSS SLOPE OF 1%. ALL AREAS MUST BE GRADED IN A MANNER SO THAT NO STANDING WATER IS PRESENT AFTER FLOODING. ALL DELETERIOUS MATERIAL SUCH AS SOD, TOPSOIL, STICKS, ETS., SHALL BE REMOVED PRIOR TO PAVING. STATE APPROVED PREEMERGENCE HERBICIDE SHALL BE APPLIED OVER THE ENTIRE SUB-GRADE.

   B. PRIOR TO PAVING SUB-GRADE SHALL BE APPROVED BY AN ARCHITECT OR OTHER QUALIFIED INDIVIDUAL.

2. DECOMPOSED GRANITE OR CRUSHED AGGREGATE WITH STALOK BINDER
   A. AGGREGATE MIX SHALL BE DECOMPOSED GRANITE OR CRUSHED AGGREGATE. ALL AVAILABLE MATERIALS HAVE BEEN TESTED AND APPROVED BY PRODUCT MANUFACTURE.

   B. THE AGGREGATE MIXTURE IS TO BE BLENDED AS PER MANUFACTURER'S SPECIFICATIONS BY APPROVED MANUFACTURE'S BLENDING METHODS.

   C. CONTRACTOR SHALL GUARANTEE THAT MATERIALS USED AND INSTALLATION OF AGGREGATE MATERIALS ARE IN ACCORDANCE WITH MANUFACTURE'S RECOMMENDATIONS.

3. AGGREGATE PAVING
   A. THE MIXTURE SHALL BE PLACED BY A SPREADER OR OTHER APPROVED MEANS AT A 2-INCH COMPACTED DEPTH OVER A COMPACTED SUB-GRADE.

   B. SPREAD BY GRADING ONTO THE PREPARED BASE UNTIL THE ENTIRE AREA IS COVERED.

   C. THE SURFACE COVER SHALL BE COMPACTED USING A 5-TON DOUBLE-DRUM ROLLER OR SIMILAR TO GIVE A FINAL DEPTH OF 2-INCHES.

4. "STALOK" IS AN APPROVED BRAND OF POLYMER COATED CRUSHED STONE PATHWAY MIX. OTHER MANUFACTURES OF POLYMER COATED CRUSH STONE WHICH MEET THE MINIMUM SPECIFICATION OF THE "STALOK" PRODUCT WILL BE CONSIDERED AN APPROVED EQUAL.

   STALOK IS A PRODUCT TRADE MARK BY STABILIZER SOLUTIONS, INC., ARIZONA
   STABILIZER SOLUTIONS: (602) 255-5900
   LOCAL SUPPLIER: GAIL MATERIAL: (951) 279-1095

REVISION	NO:	BY:	DATE:	NO:	BY:	DATE:
	1	LJA	09/01/05	3	JCW	10/23/07
	2	SLR	03/28/07	4	SRL	02/22/08

Drawn By: LJA Date: 01/03/05

APPROVED: C27172 CITY ENGINEER RCE

EQUESTRIAN TRAIL STANDARD

Std. Dwg. No. 700

CITY of NORCO STANDARD DRAWING

1 2 C. INTERLOCKING BRICK PAVERS

NOTES:

1. EDGE TREATMENT SHALL BE AS STRAIGHT AS POSSIBLE TO COMPLIMENT THE ALIGNMENT OF PAVING STONES.
2. INTERLOCKING PAVING STONES (I.P.S.) SHALL CONFORM TO ASTM C936 AND BE INSTALLED TO MANUFACTURER'S SPECIFICATIONS.
   BLOCK STYLE = CAPRI
   PATTERN = RUNNER
   COLOR = SANTA BARBARA SANDSTONE
   (OR APPROVED EQUAL BY THE CITY ENGINEER.)
3. ALL SURFACING UTILITIES SHALL BE ENCASED IN CONCRETE, CREATING STRAIGHT LINES TO CUT AGAINST.
4. PCC CLASS
   DRIVEWAY – 520–A–2500

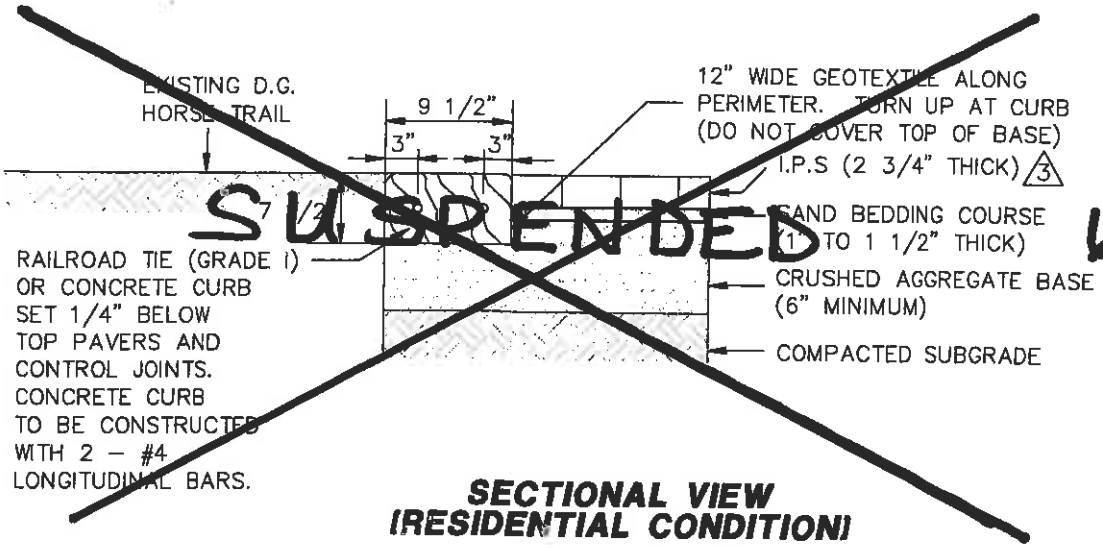

SUSPENDED 6/15/11

SECTIONAL VIEW (RESIDENTIAL CONDITION)

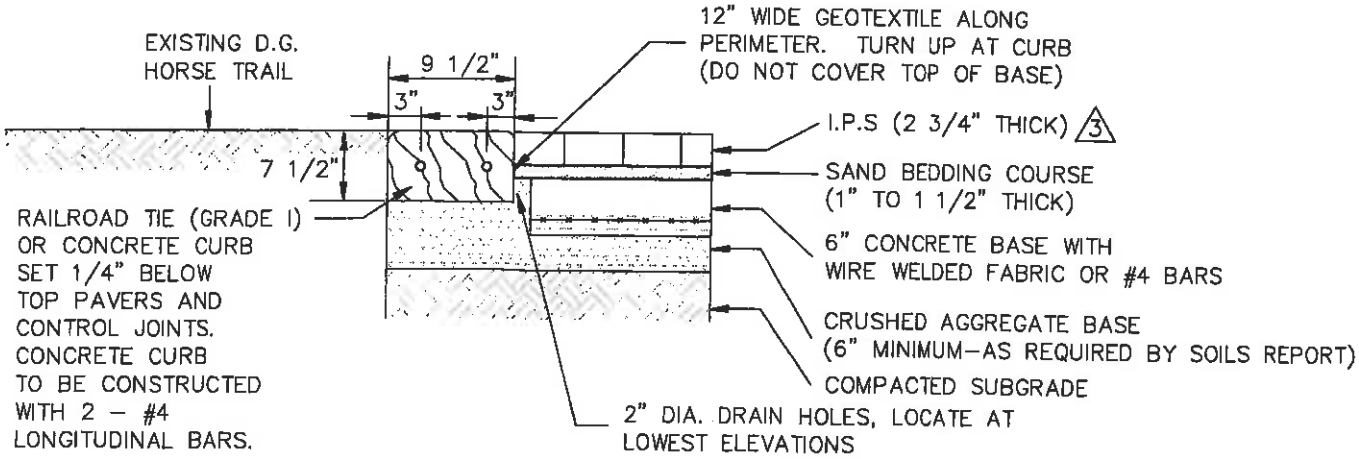

SECTIONAL VIEW (COMMERCIAL CONDITION)

REVISION	NO:	BY:	DATE:	NO:	BY:	DATE:
	1	LJA	09/01/05	3	JCW	10/23/07
	2	SRL	03/28/07	4	SRL	02/22/08

Drawn By: LJA Date: 01/03/05

APPROVED: C27172
CITY ENGINEER RCE

EQUESTRIAN TRAIL STANDARD

Std. Dwg. No. 700
Sheet 4 of 6

CITY of NORCO STANDARD DRAWING

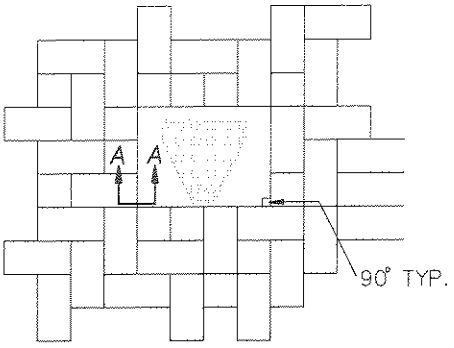

TYPICAL UTILITY ENCASEMENT

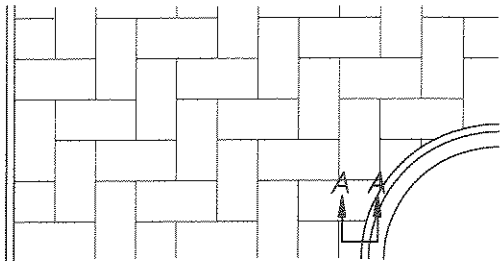

CUT TO FIT ALL EDGES

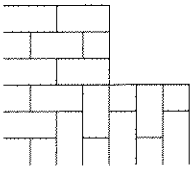

90° DIRECTIONAL CHANGE

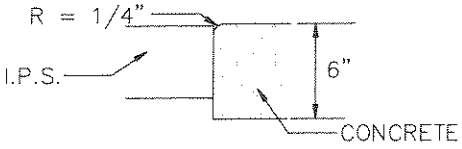

SECTION A-A

REVISION NO:	BY:	DATE:	NO:	BY:	DATE:
1	LJA	09/01/05	3	JCW	10/23/07
2	SRL	03/28/07	4	SRL	02/22/08

Drawn By: LJA Date: 01/03/05

APPROVED: C27172 CITY ENGINEER RCE

EQUESTRIAN TRAIL STANDARD

Std. Dwg. No. 700

Sheet 5 of 6

CITY of NORCO STANDARD DRAWING

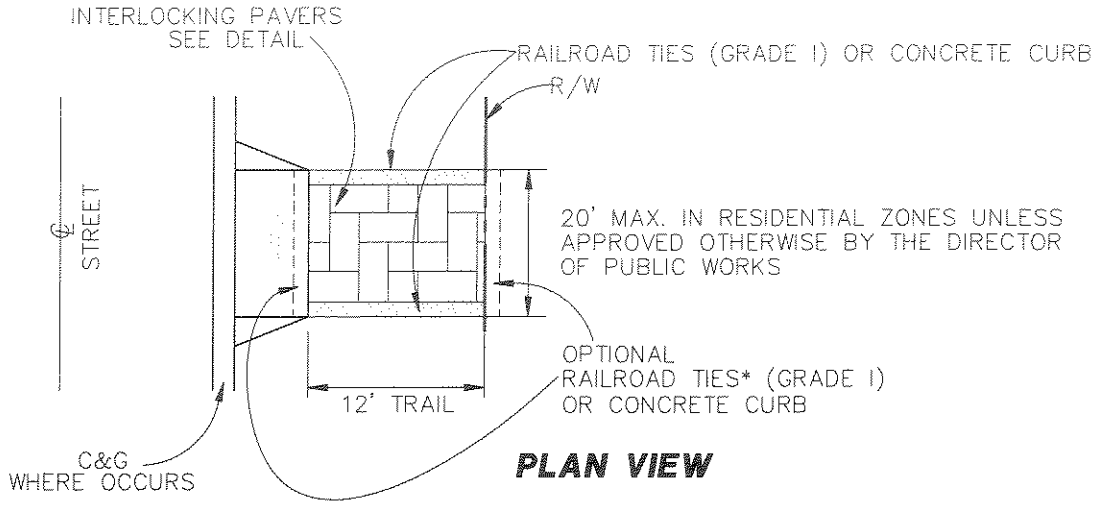

PLAN VIEW

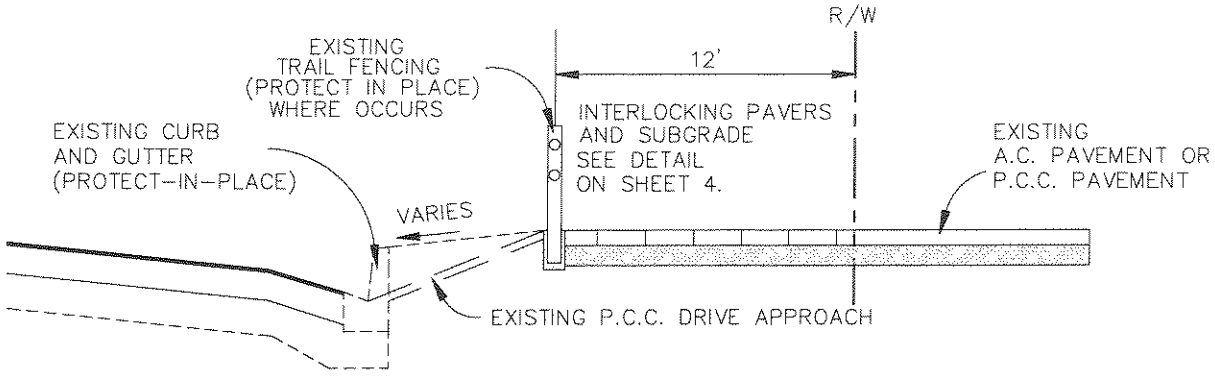

SECTIONAL VIEW

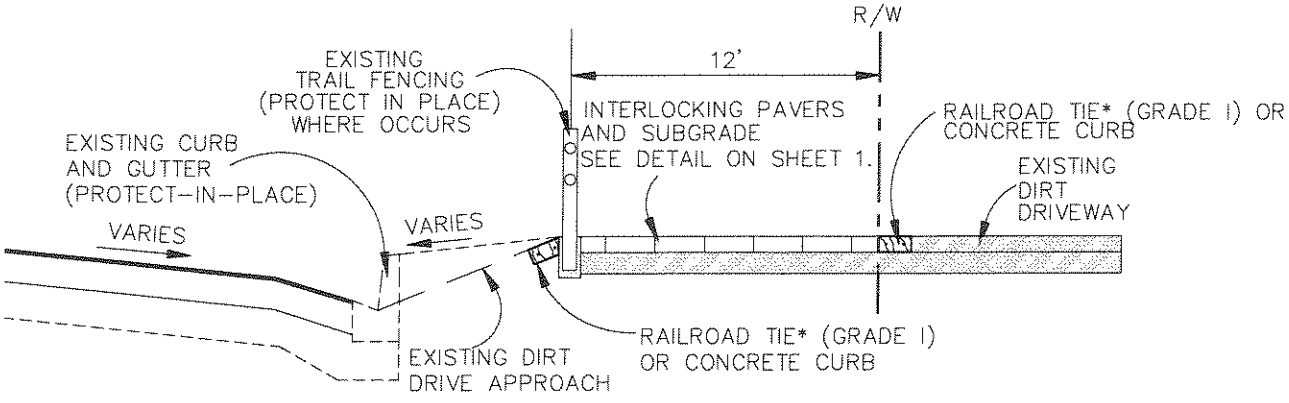

SECTIONAL VIEW

*NOTE:
TO BE USED ONLY IF DWY OR DWY
APPROACH IS OTHER THAN A.C OR P.C.C.

REVISION	NO:	BY:	DATE:	NO:	BY:	DATE:
	1	LJA	09/01/05	3	JCW	10/23/07
	2	SRL	03/28/07	4	SRL	02/22/08

Drawn By: LJA Date: 01/03/05

APPROVED: C27172 CITY ENGINEER RCE

EQUESTRIAN TRAIL STANDARD

Std. Dwg. No. 700

Sheet 6 of 6

CITY of NORCO STANDARD DRAWING

(REPLACEMENT OF EXISTING ONLY)

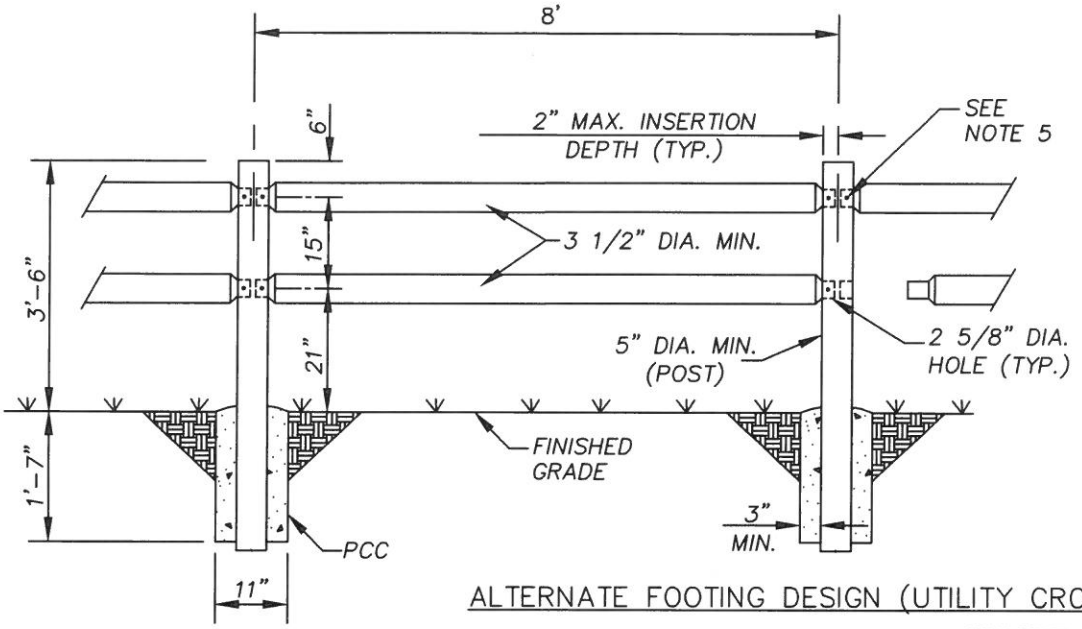

ALTERNATE FOOTING DESIGN (UTILITY CROSSING)

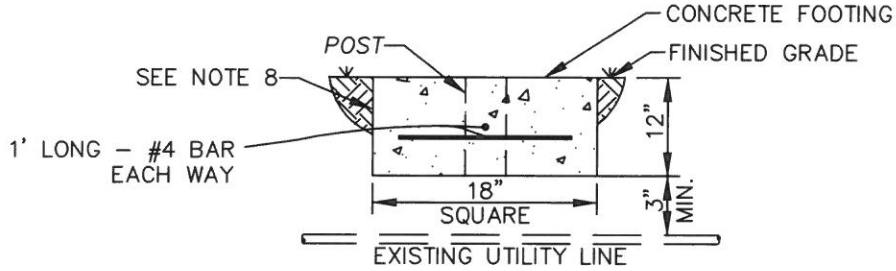

NOTES:

1. THE TOP OF THE POST SHALL NOT EXCEED 6" ABOVE THE TOP RAIL
2. THE HEIGHT ABOVE THE GROUND OF THE CENTERLINE OF THE TOP RAIL SHALL BE 36".
3. THE CENTER–TO–CENTER DISTANCE BETWEEN THE TOP AND BOTTOM RAILS SHALL BE 15".
4. ALL POSTS AND RAILS SHALL BE FULLY PRESSURE TREATED WITH EITHER COPPER AZOLE OR ALKALINE COPPER QUATERNARY. POSTS AND RAILS SHALL EXHIBIT A MINIMUM PRENETRATION OF 1/8" ON ALL TREATED SURFACES.
5. INSERTION DEPTH OF THE RAIL INTO THE POST SHALL BE 2". NAILS SHALL BE 16d COMMON, GALVANIZED–RING OR 3" STEEL DRYWALL SCREWS. ONE NAIL OR SCREW PER EACH RAIL ON ONE SIDE OF POST.
6. CONCRETE SHALL BE 500–C–2500.
7. POLE FENCING MATERIAL SHALL BE EITHER CEDAR OR LODGE POLE PINE.
8. WOOD POSTS SHALL BE LOCATED BETWEEN 4' (MINIMUM) AND 8' (MAXIMUM) AWAY FROM DRIVEWAYS.
9. WOOD POSTS SHALL BE LOCATED 3' AWAY FROM FIRE HYDRANTS AND TREES.
10. IN CASE OF CONFLICT BETWEEN POST FOUNDATION AND UNDERGROUND UTILITIES, CONTRACTOR SHALL CONSTRUCT POST FOUNDATION PER ALTERNATE FOUNDATION DETAIL SHOWN ABOVE. CONTRACTOR SHALL PROTECT UNDERGROUND UTILITY IN PLACE DURING CONSTRUCTION.

REVISION	NO:	BY:	DATE:	NO:	BY:	DATE:

Drawn By: SJN Date: 03/31/16

APPROVED: CITY ENGINEER 27172 RCE

WOOD EQUESTRIAN TRAIL FENCING DETAIL

Std. Dwg. No. 705

Sheet 1 of 2

CITY of NORCO STANDARD DRAWING

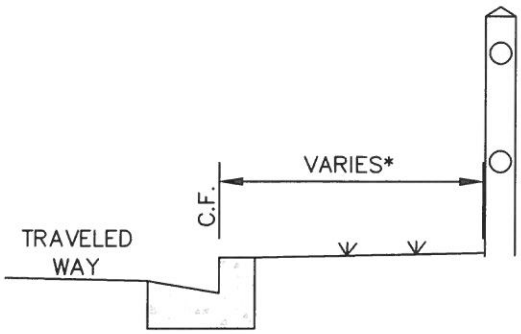

BARRIER CURB ADJACENT

CASE "A"

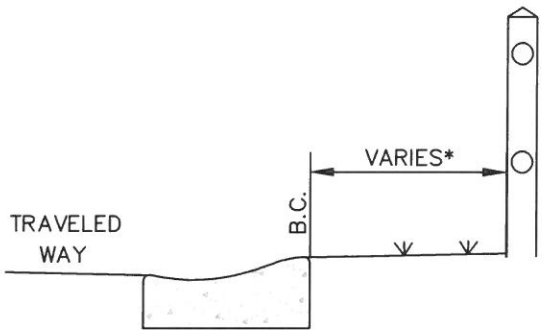

ROLLED CURB ADJACENT

CASE "B"

* THIS DIMENSION IS TO BE DETERMINED BY THE CITY TO MAINTAIN A STANDARD TRAIL WIDTH IN THE AREA.

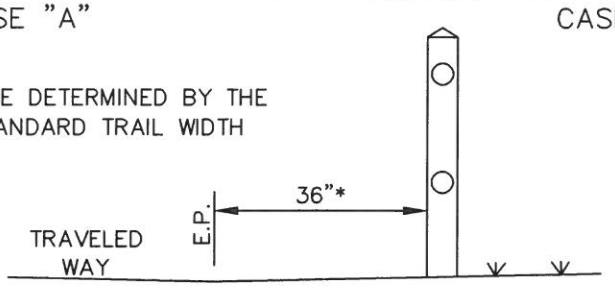

EDGE OF PAVEMENT ADJACENT

CASE "C"

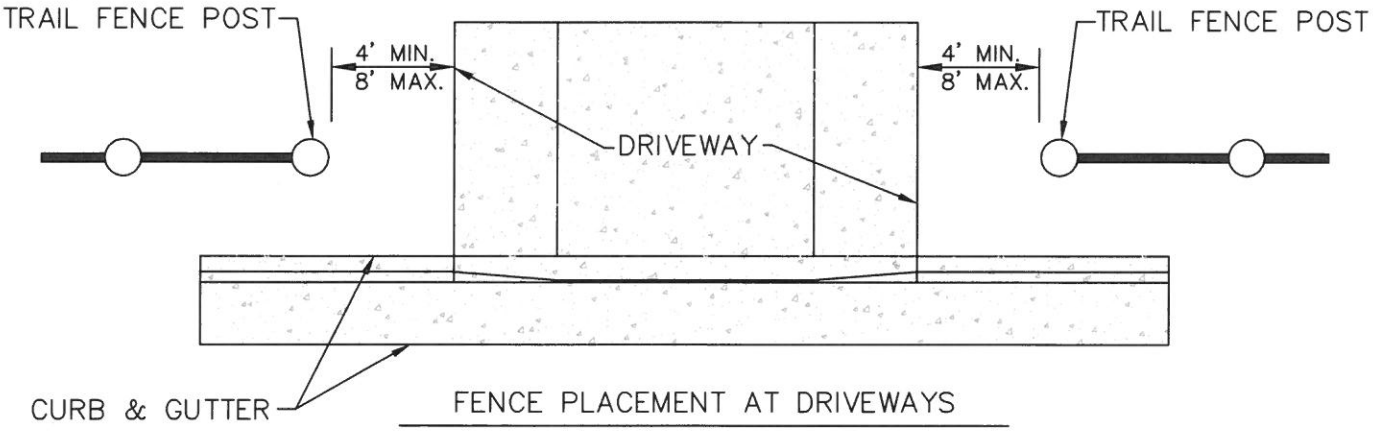

FENCE PLACEMENT AT DRIVEWAYS

FENCE PLACEMENT AT TREES & FIRE HYDRANTS

REVISION	NO:	BY:	DATE:	NO:	BY:	DATE:

Drawn By: SJN Date: 03/31/16

APPROVED: CITY ENGINEER 27172 RCE

WOOD EQUESTRIAN TRAIL FENCING DETAIL

Std. Dwg. No. 705

Sheet 2 of 2

CITY of NORCO STANDARD DRAWING

(NEW CONSTRUCTION ONLY)

*REPLACEMENT OF EXISTING WOOD FENCE WITH PVC FENCE MUST BE APPROVED BY THE PUBLIC WORKS DEPT.

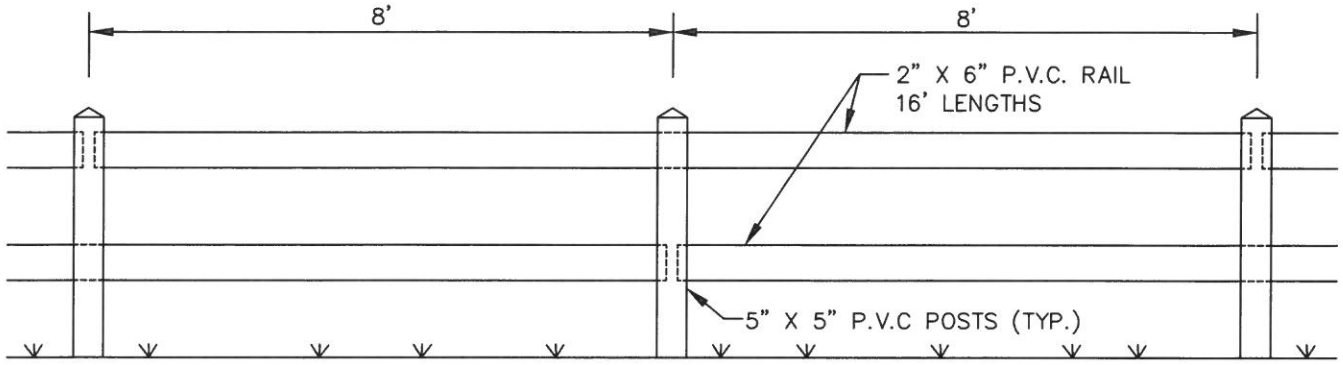

RAILING PLACEMENT

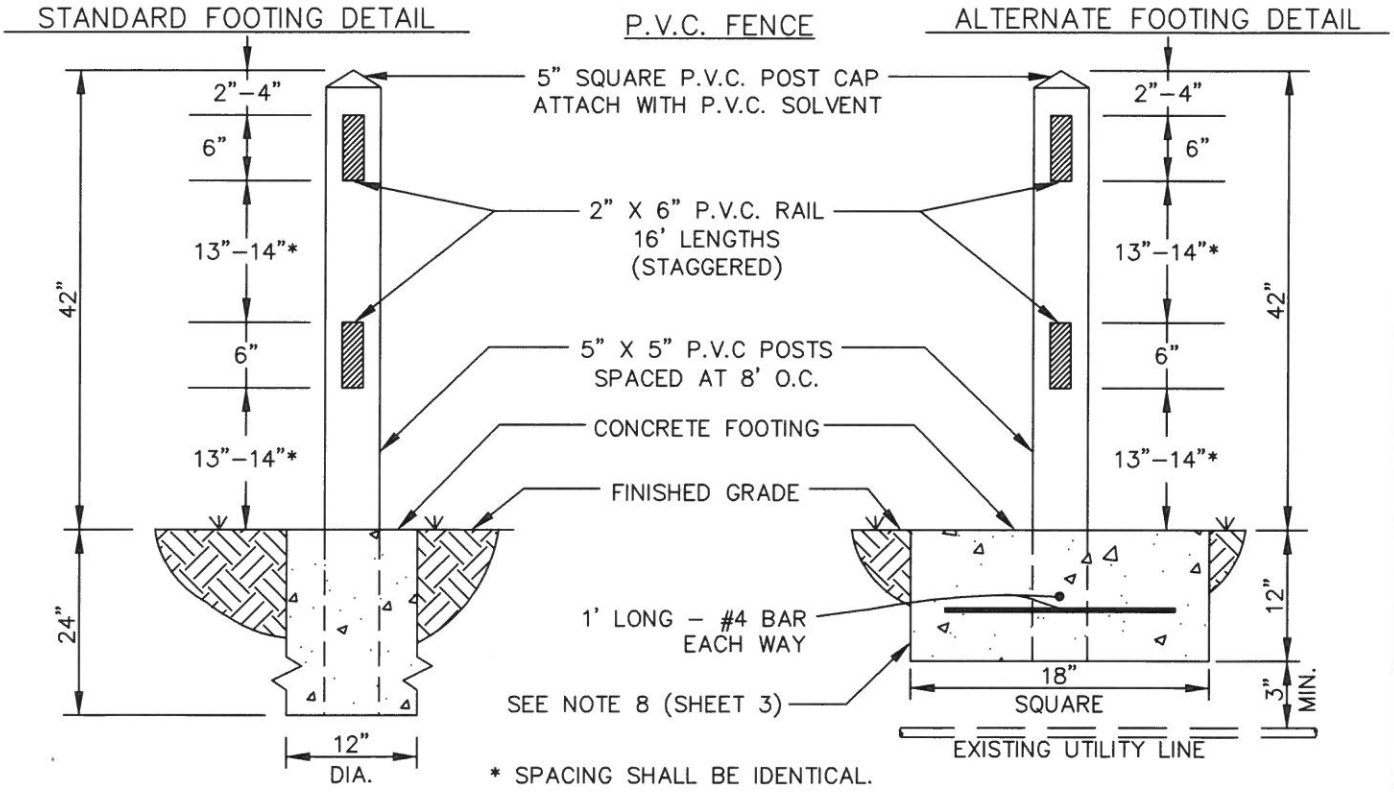

REVISION	NO:	BY:	DATE:	NO:	BY:	DATE:

Drawn By: SJN Date: 03/31/16

APPROVED: CITY ENGINEER 27172 RCE

PVC EQUESTRIAN TRAIL FENCING DETAIL

Std. Dwg. No. 706

Sheet 1 of 3

CITY of NORCO STANDARD DRAWING

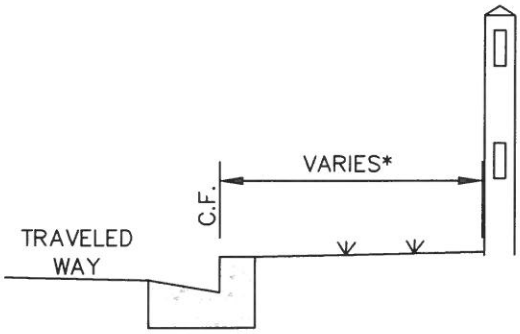

BARRIER CURB ADJACENT

CASE "A"

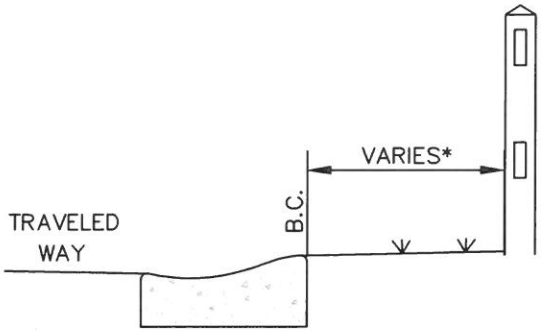

ROLLED CURB ADJACENT

CASE "B"

* THIS DIMENSION IS TO BE DETERMINED BY THE CITY TO MAINTAIN A STANDARD TRAIL WIDTH IN THE AREA.

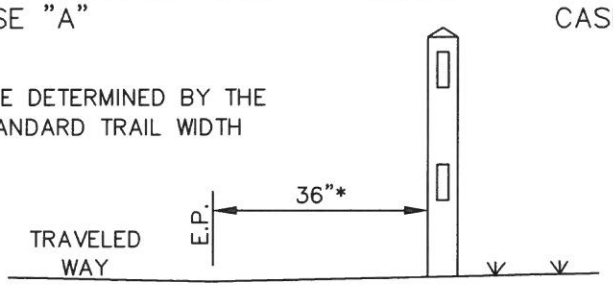

EDGE OF PAVEMENT ADJACENT

CASE "C"

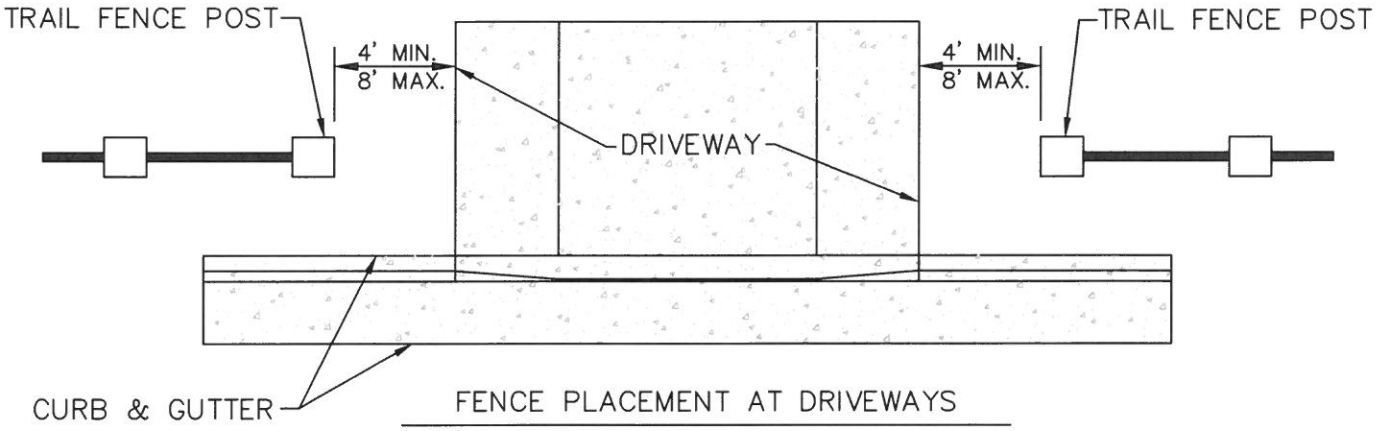

FENCE PLACEMENT AT DRIVEWAYS

FENCE PLACEMENT AT TREES & FIRE HYDRANTS

REVISION	NO:	BY:	DATE:	NO:	BY:	DATE:

Drawn By: SJN Date: 03/31/16

APPROVED: CITY ENGINEER 27172 RCE

PVC EQUESTRIAN TRAIL FENCING DETAIL

Std. Dwg. No. 706

Sheet 2 of 3

CITY of NORCO STANDARD DRAWING

NOTES:

1. CONCRETE FOOTING SHALL BE CONSTRUCTED OF CLASS 500-C-2500 CONCRETE PER THE STANDARD SPECIFICATIONS FOR PUBLIC WORKS CONSTRUCTION, LATEST EDITION.
2. P.V.C. EQUESTRIAN TRAIL FENCING COMPONENTS SHALL BE MANUFACTURED TO THE FOLLOWING THICKNESSES:
   5" X 5" P.V.C. POST: 0.135" (135 MIL)
   2" X 6" P.V.C. RAIL: 0.100" (100 MIL)
3. P.V.C. RAILS SHALL BE CONNECTED TO P.V.C. POSTS AT 16' O.C. BY USE OF A ROUTED POST/GRAVITY LOCK METHOD (OR APPROVED EQUAL). TOP AND BOTTOM RAIL CONNECTIONS SHALL BE STAGGERED EVERY 8'.
4. P.V.C. POSTS LOCATED AT THE MIDPOINT OF P.V.C. RAILS SHALL HAVE ROUTED HOLES TO PROVIDE A PASS THROUGH FOR P.V.C. RAILS.
5. P.V.C. EQUESTRIAN TRAIL FENCING SHALL BE PLACED PER THE APPROPRIATE CASE SHOWN ON THIS STANDARD PLAN.
6. P.V.C. POSTS SHALL EXTEND 42" (OR 48") ABOVE THE FINISH GRADE. SPACING OF RAILS SHALL BE DONE IN SUCH A MANNER AS TO ACCOMODATE THE SPACING LIMITS SHOWN.
7. INSTALLATION SHALL BE PER MANUFACTURER'S STANDARDS.
8. IN CASE OF CONFLICT BETWEEN POST FOUNDATION AND UNDERGROUND UTILITIES, CONTRACTOR SHALL CONSTRUCT POST FOUNDATION PER ALTERNATE FOUNDATION DETAIL SHOWN ABOVE. CONTRACTOR SHALL PROTECT UNDERGROUND UTILITY IN PLACE DURING CONSTRUCTION.
9. PVC POSTS SHALL BE LOCATED BETWEEN 4' (MINIMUM) AND 8' (MAXIMUM) AWAY FROM DRIVEWAYS.
10. PVC POSTS SHALL BE LOCATED 3' AWAY FROM FIRE HYDRANTS AND TREES.
11. REPLACEMENT OF EXISTING WOOD FENCE WITH PVC FENCE MUST BE APPROVED BY THE PUBLIC WORKS DEPT.

REVISION	NO:	BY:	DATE:	NO:	BY:	DATE:

Drawn By: SJN Date: 03/31/16

APPROVED: CITY ENGINEER 27172 RCE

PVC EQUESTRIAN TRAIL FENCING DETAIL

Std. Dwg. No. 706

Sheet 3 of 3

CITY of NORCO STANDARD DRAWING

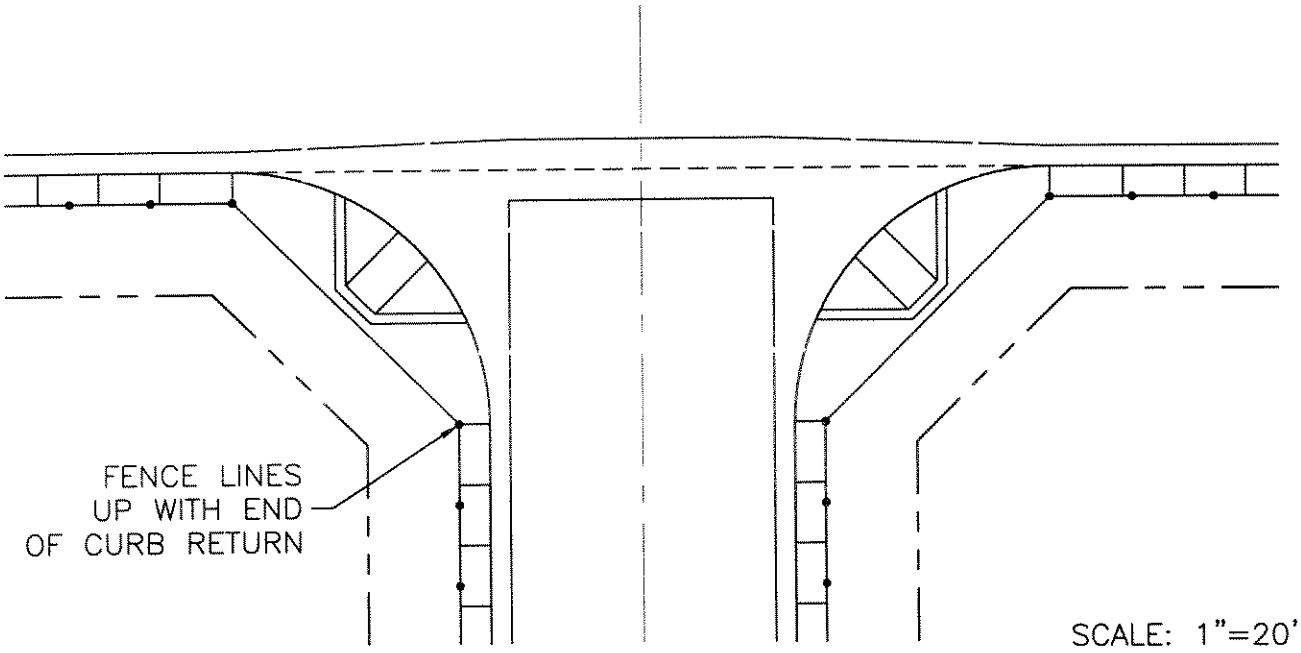

HORSETRAIL at IMPROVED INTERSECTION

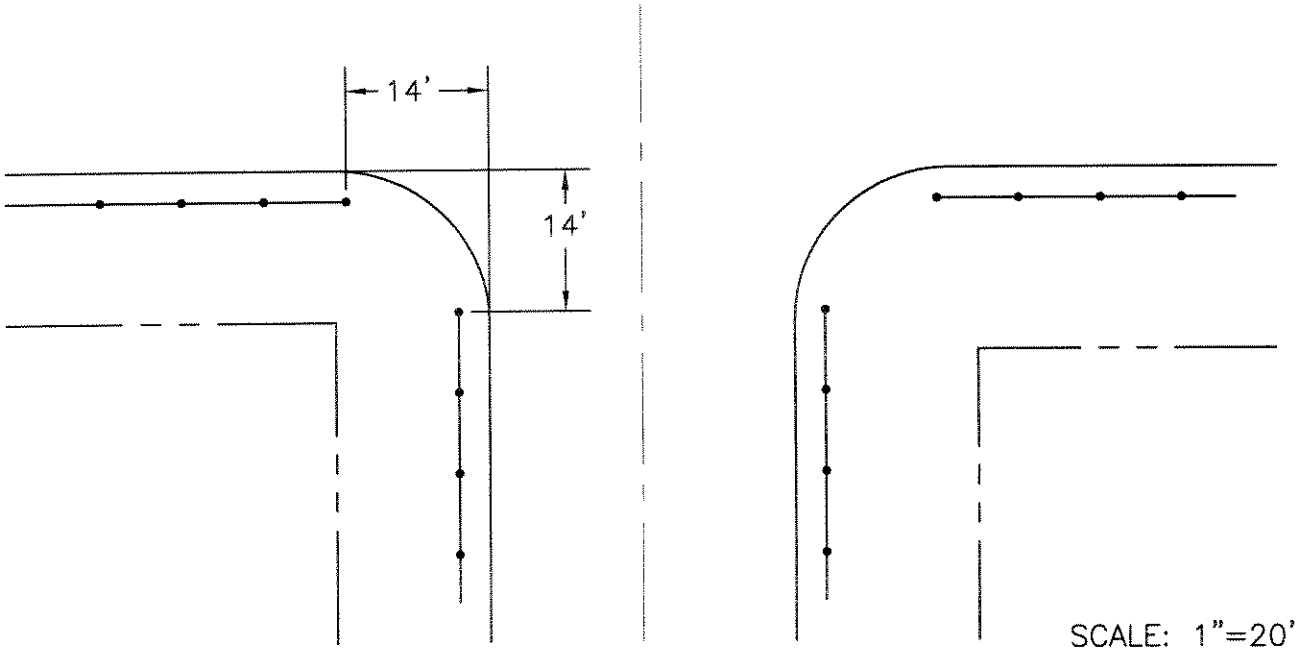

HORSETRAIL at UNIMPROVED INTERSECTION

REVISION	NO:	BY:	DATE:	NO:	BY:	DATE:

Drawn By: LJA Date: 12/21/04

12/22/04
APPROVED: Joseph S. Schenk 24039
CITY ENGINEER RCE

EQUESTRIAN TRAIL at CORNER

Std. Dwg. No.
710
Sheet 1 of 1

CITY of NORCO STANDARD DRAWING

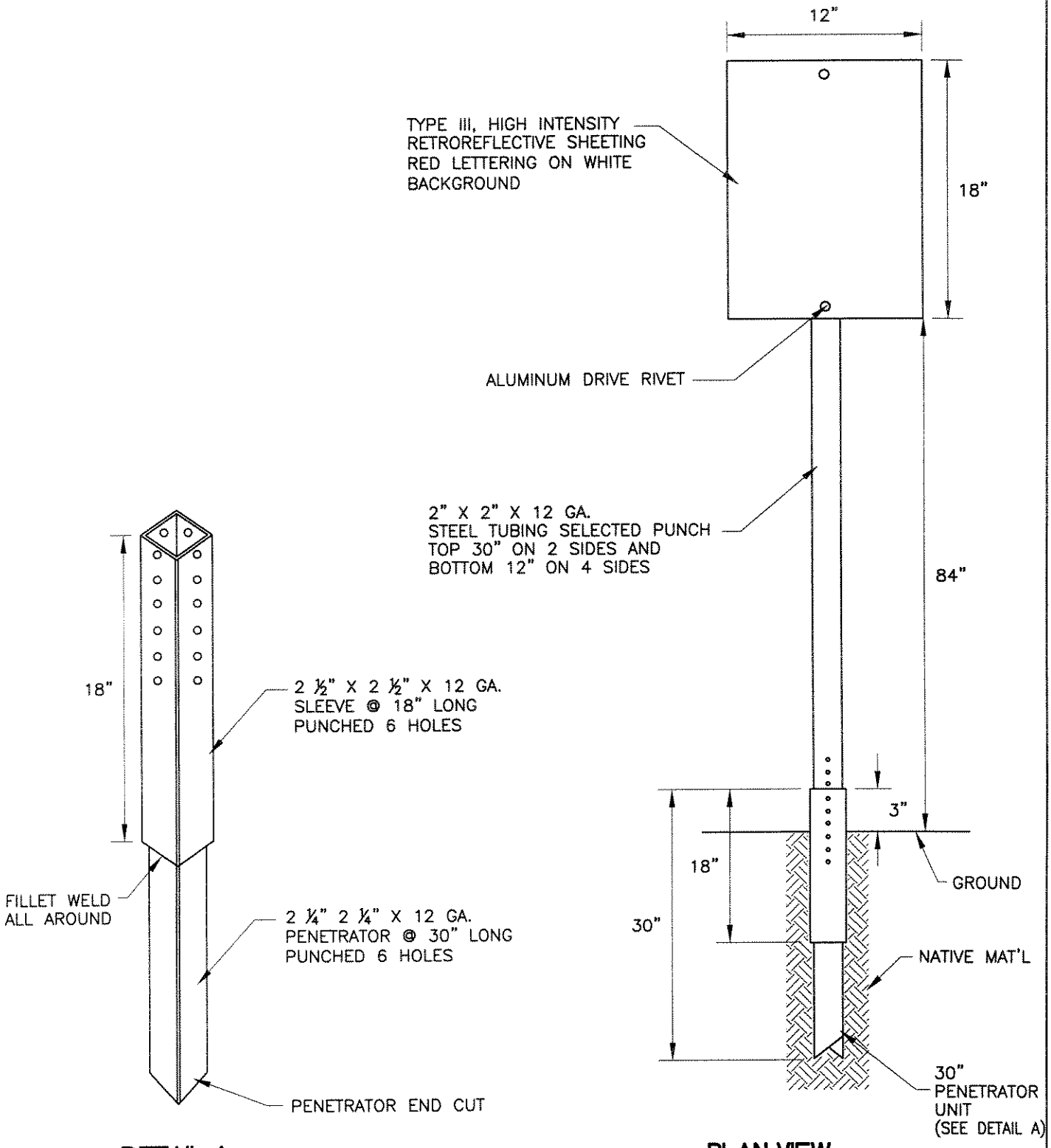

DETAIL A

PLAN VIEW

REVISION	NO:	BY:	DATE:	NO:	BY:	DATE:

12/16/04

APPROVED: Joseph S. Schenk 24039
CITY ENGINEER RCE

Drawn By: LJA

Date: 3/19/04

HORSE TRAIL SIGN

Std. Dwg. No.
720
Sheet 1 of 1

800
SIGN AND MARKING STANDARDS

CITY of NORCO STANDARD DRAWING

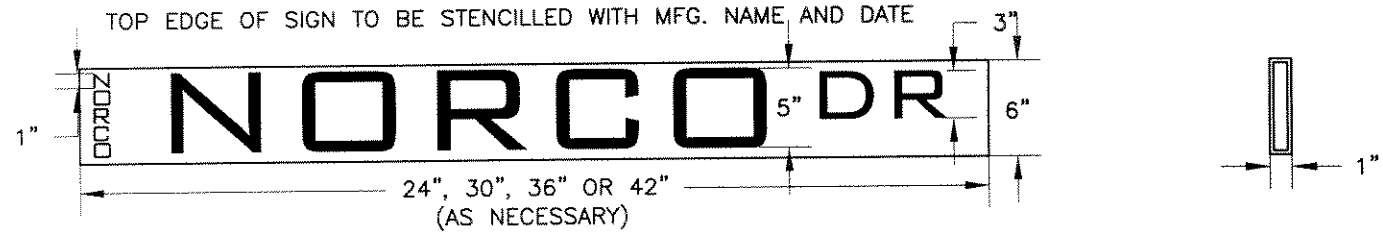

LETTERS TO BE ROUNDED STYLE
CONFORMING WITH STANDARD ALPHABET

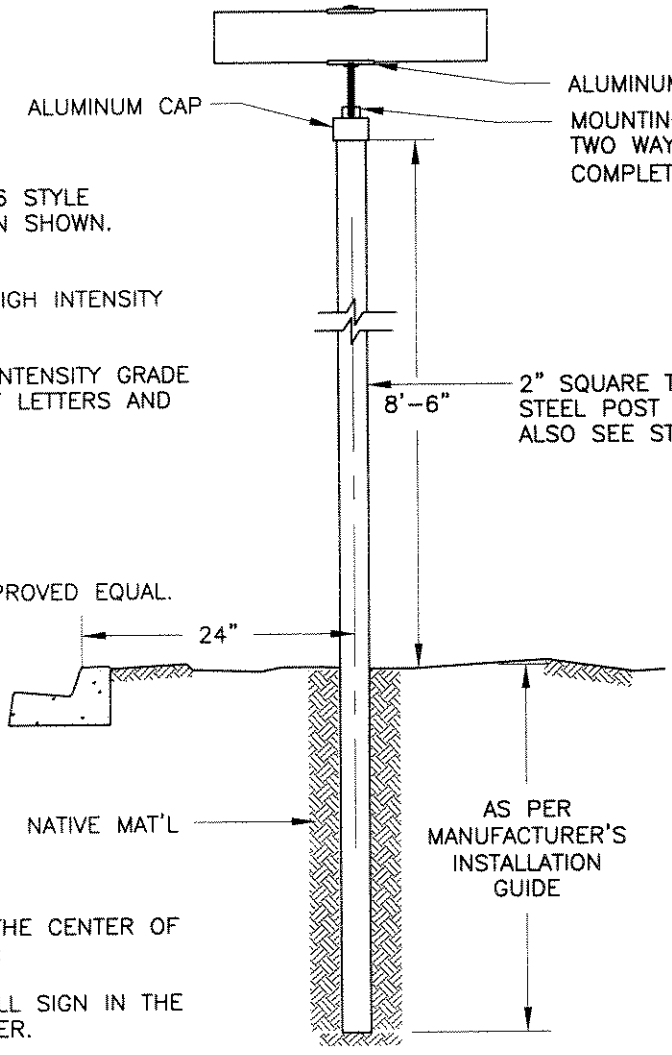

SIGN MATERIALS:

1. SIGN SHALL BE EXTRUDED AT6 STYLE ALUMINUM OF THE CROSS SECTION SHOWN. 6063T5 ALLOY.

2. BACKGROUND – GREEN 3M HIGH INTENSITY GRADE SHEETING.

3. LEGEND SHALL BE 3M HIGH INTENSITY GRADE SHEETING FOR ALL WHITE DIE CUT LETTERS AND NUMBERS.

POST MATERIALS:

1. 2" SQUARE TELESPAR OR APPROVED EQUAL.

2. GALVANIZED STEEL.

SIGN PLACEMENT:

THE SIGN SHALL BE PLACED AT THE CENTER OF THE CURB RETURN AS FOLLOWS:

1. AT TEE INTERSECTIONS, INSTALL SIGN IN THE NORTHEAST OR SOUTHWEST CORNER.

2. AT FOUR WAY INTERSECTIONS, INSTALL SIGNS ON BOTH NORTHEAST AND SOUTHWEST CORNERS.

3. AT KNUCKLES INSTALL SIGNS AT CENTER OF CURB RETURN.

REVISION	NO:	BY:	DATE:	NO:	BY:	DATE:

12/16/04

APPROVED: Joseph S. Schenk 24039
CITY ENGINEER RCE

Drawn By: LJA Date: 7/29/04

STREET NAME SIGN

Std. Dwg. No.
800A
Sheet 1 of 1

CITY of NORCO STANDARD DRAWING

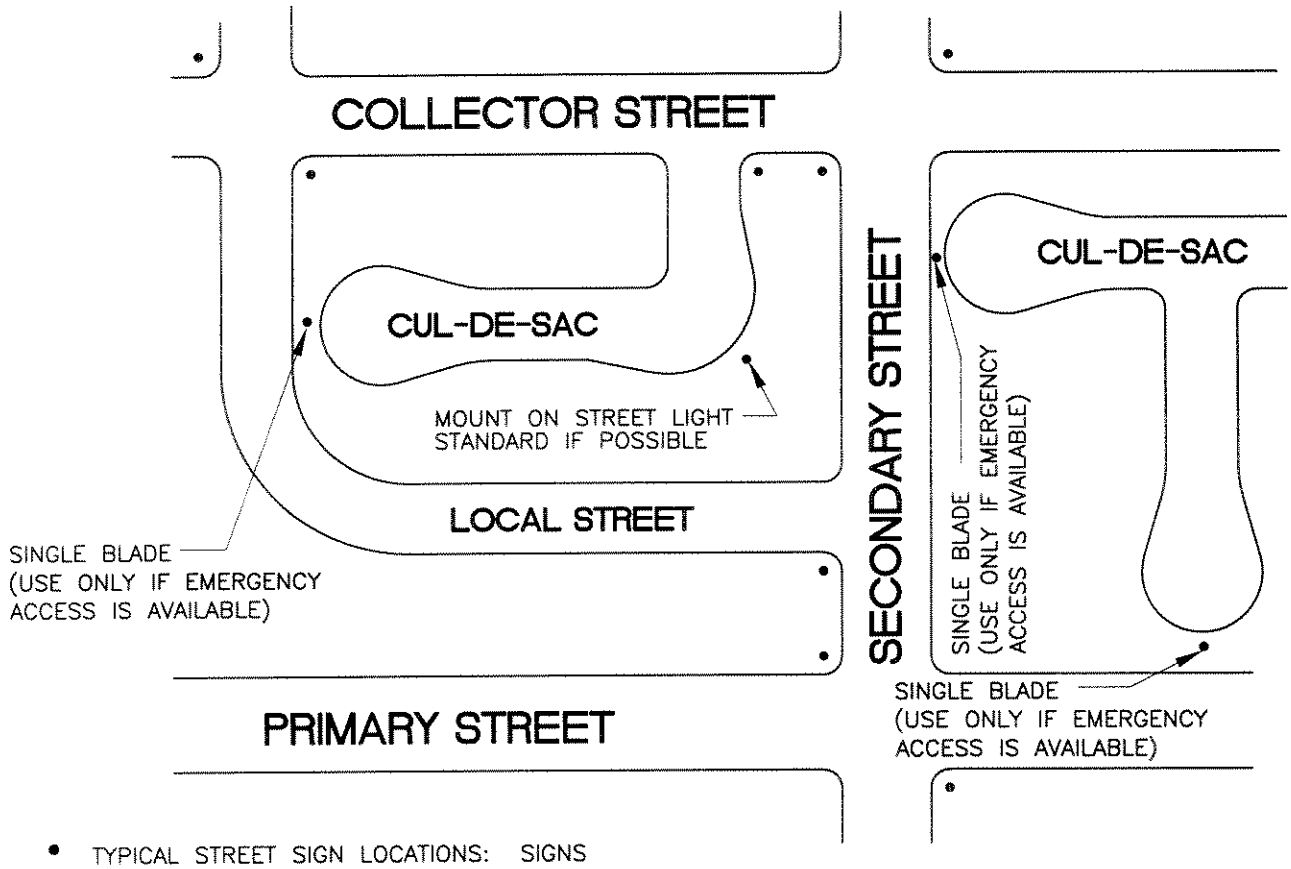

- TYPICAL STREET SIGN LOCATIONS: SIGNS SHOULD BE MOUNTED ON TOP OF STOP SIGN POSTS OR STREET LIGHT STANDARDS WHERE POSSIBLE. ALL SIGNS ARE TO BE DOUBLE SIGN INSTALLATIONS UNLESS OTHERWISE NOTATED ON THE PLANS.

CURB & SIDEWALK	SIDEWALK WIDTH	SETBACK
CONTIGUOUS	5' OR LESS	6" BEHIND SIDEWALK
CONTIGUOUS	MORE THAN 5'	2' BEHIND CURBFACE
SEPARATE	--------	2' BEHIND CURBFACE

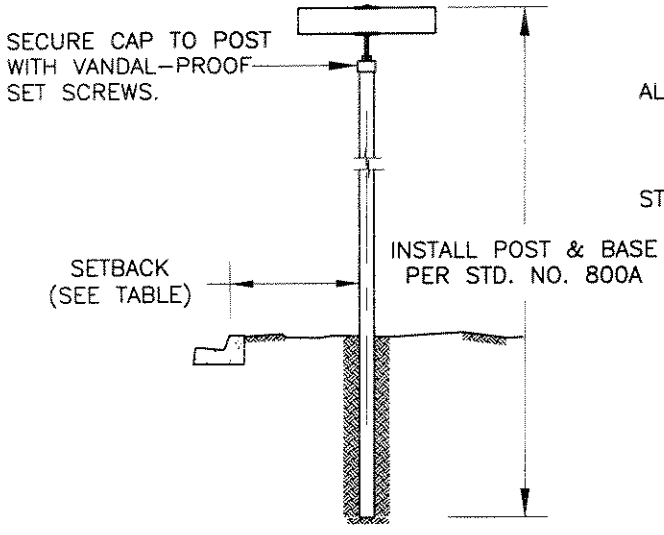

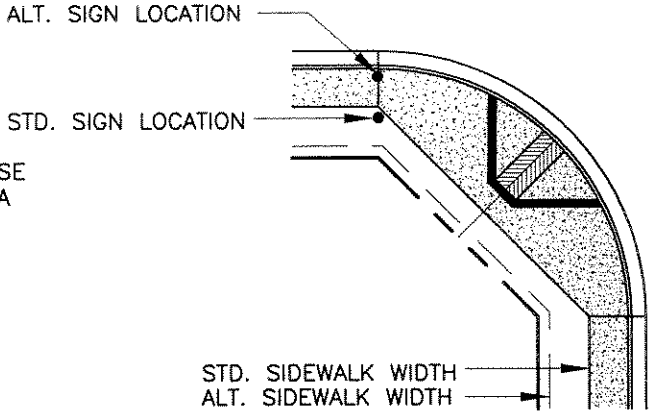

REVISION	NO:	BY:	DATE:	NO:	BY:	DATE:

Drawn By: LJA Date: 12/29/04

12/28/04
APPROVED: Joseph S. Schenk 24039
CITY ENGINEER RCE

TYPICAL STREET NAME SIGN LOCATIONS

Std. Dwg. No. **800B**
Sheet 1 of 1

CITY of NORCO STANDARD DRAWING

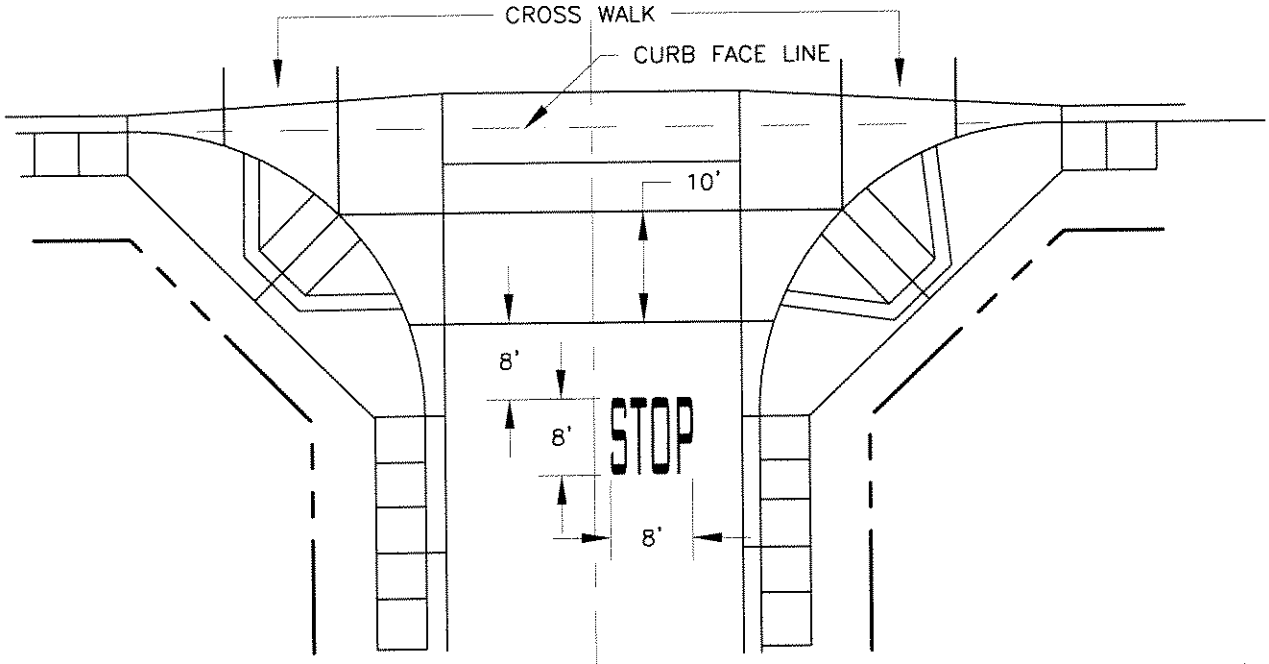

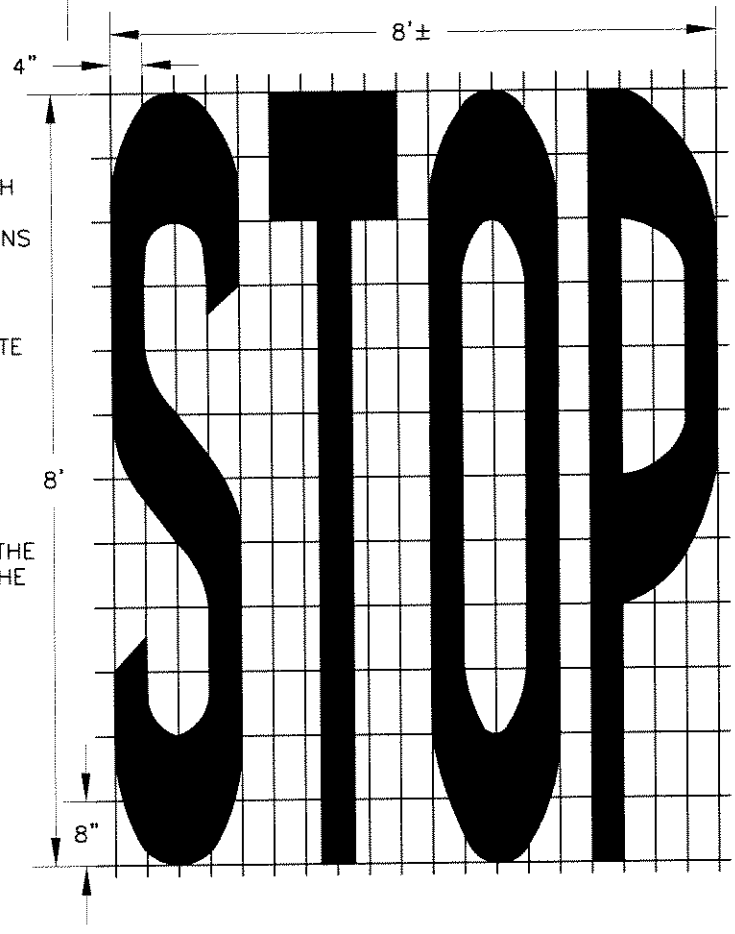

NOTES:

1. ALL LETTERS WILL BE IN CONFORMANCE WITH THE STANDARD ALPHABETS FOR HIGHWAY SIGNS AND PAVEMENT MARKINGS APPROVED BY CALTRANS HIGHWAY TRAFFIC MANUAL (LATEST EDITION). LETTERS WILL BE 8 FEET IN HEIGHT.

2. PAINT WILL BE J.E. BAUER # 628 A-9 WHITE PREMIX OR APPROVED EQUAL.

3. PAINTED AREA = 22 SQUARE FEET.

4. ONE STOP LEGEND SHALL BE INSTALLED IN EACH TRAVEL LANE.

5. THIS STANDARD IS IN CONFORMANCE WITH THE HIGHWAY SIGNS AND MARKINGS DESCRIBED IN THE CALTRANS HIGHWAY TRAFFIC MANUAL (LATEST EDITION).

REVISION	NO:	BY:	DATE:	NO:	BY:	DATE:

12/28/04

APPROVED: Joseph S. Schenk 24039
CITY ENGINEER RCE

Drawn By: LJA

Date: 3/19/04

STOP BAR and LEGEND PLACEMENT

Std. Dwg. No.
815
Sheet 1 of 1

CITY of NORCO STANDARD DRAWING

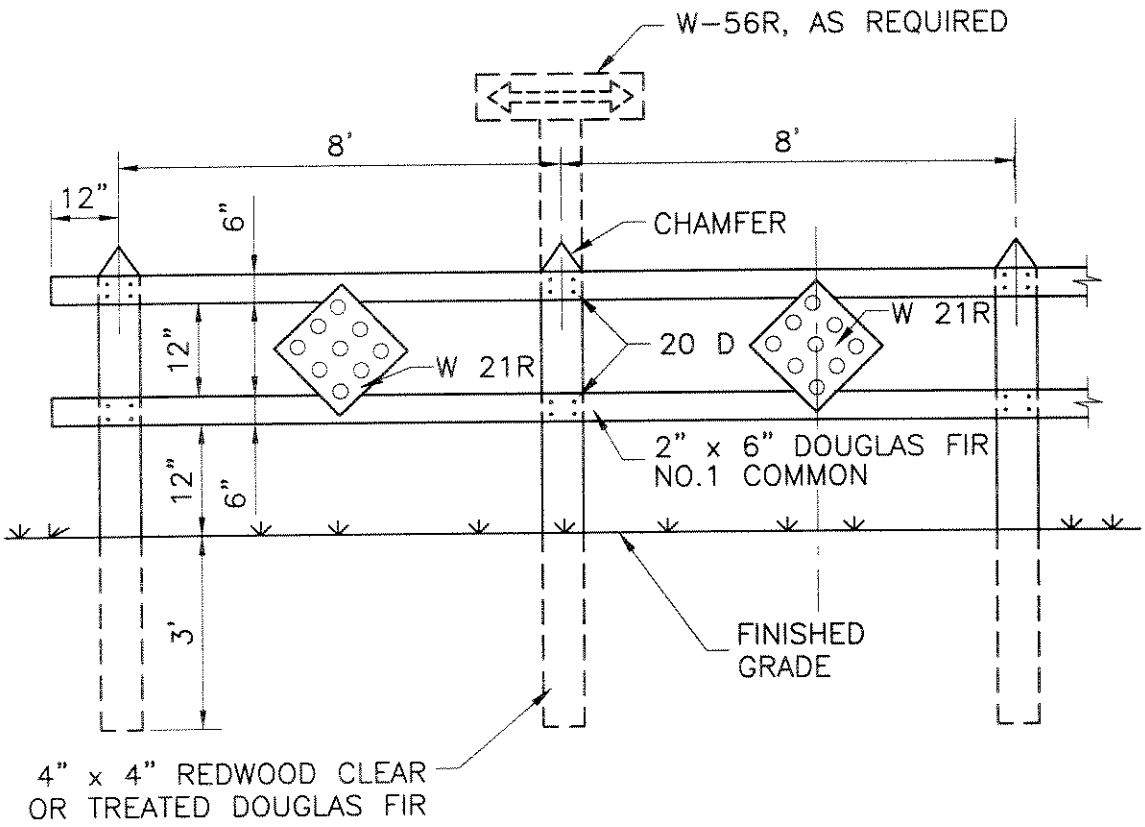

TYPICAL SIDE PANEL **TYPICAL CENTER PANEL**

ROADWAY WIDTH	NO. OF PANELS	TOTAL LENGTH
10'	1	10'
18'-20'	2	18'
32'	3	26'
36'-40'	4	34'
64'	7	58'
72'	8	66'

NOTE:

1. ASSEMBLY IS TO BE PAINTED WITH TWO COATS OF WHITE EXTERIOR PRIME PAINT.
2. W 21 R REFLECTOR SIGN IS TO BE BOLTED TO CENTER OF BARRICADE.
3. BOLTS, NUTS AND NAILS SHALL BE GALVANIZED STEEL.

REVISION	NO:	BY:	DATE:	NO:	BY:	DATE:

12/28/04

APPROVED: Joseph S. Schenk 24039
CITY ENGINEER RCE

Drawn By: LJA Date: 12/29/04

BARRICADE

Std. Dwg. No. **820**
Sheet 1 of 1

CITY of NORCO STANDARD DRAWING

TRAFFIC INDEX STANDARDS

MAJOR ARTERIALS	10.0
SECONDARY ARTERIALS	8.5
COLLECTOR (INDUSTRIAL)	7.5
LOCAL (INDUSTRIAL)	7.0
*COLLECTOR (RESIDENTIAL)	6.0
*LOCAL (RESIDENTIAL)	5.0

*MINIMUM STREET SECTION REQUIRED SHALL BE 4" A.C. OVER 6" C.A.B. OR AS APPROVED BY THE CITY ENGINEER.

REVISION NO:	BY:	DATE:	NO:	BY:	DATE:
1	LJA	01/27/04			

Drawn By: LJA Date: 01/27/04

APPROVED: Joseph Lehenk 24033
CITY ENGINEER RCE

TRAFFIC INDEXES FOR DESIGN USE

Std. Dwg. No. 830
Sheet 1 of 1

CITY of NORCO STANDARD DRAWING

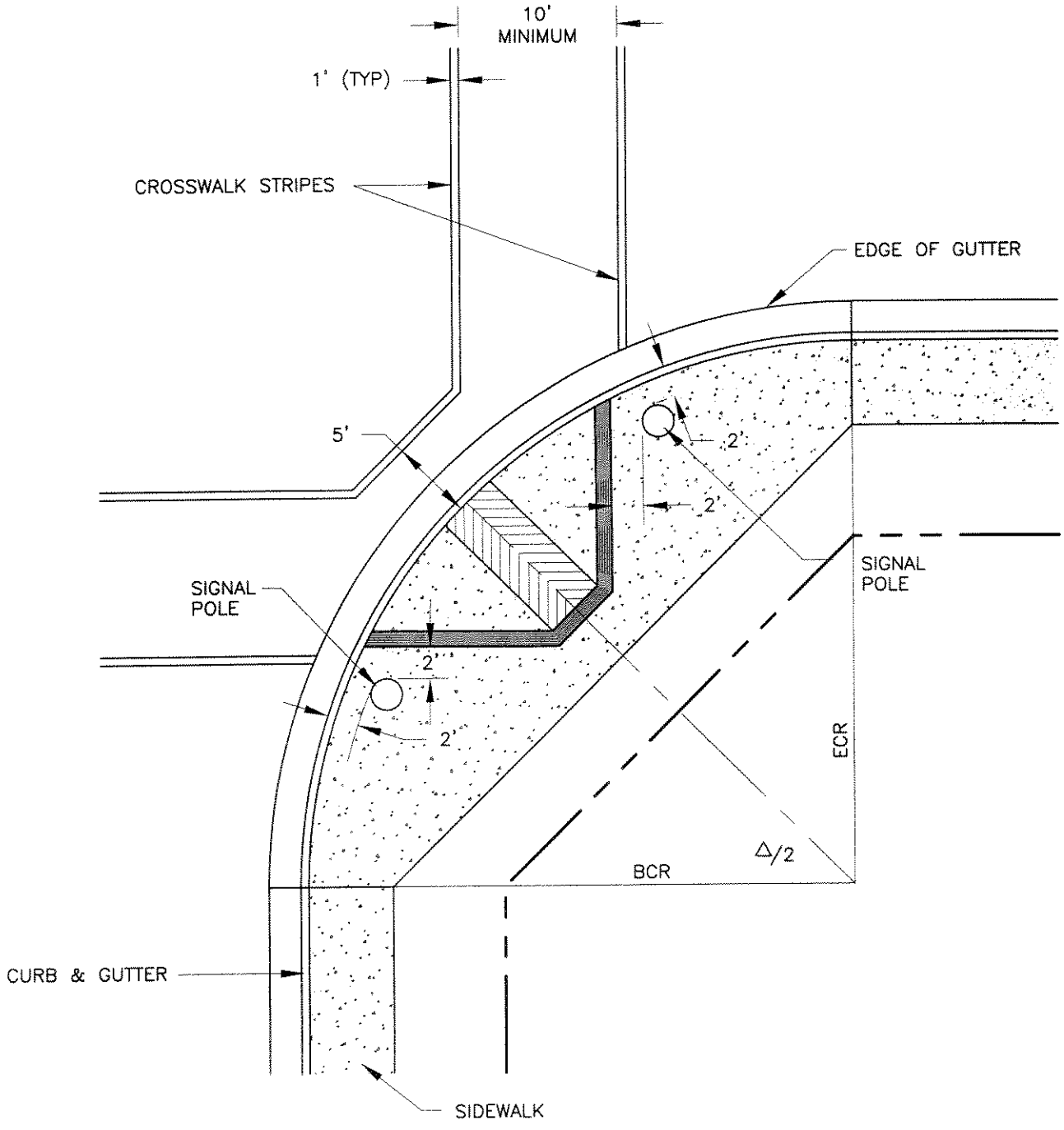

CROSSWALK WIDTH AND COLOR SHALL BE AS DETERMINED BY THE CITY ENGINEER.

REVISION	NO:	BY:	DATE:	NO:	BY:	DATE:

12/22/04

APPROVED: Joseph S. Schenk 24039
CITY ENGINEER RCE

Drawn By: LJA Date: 3/19/04

CROSSWALK PLACEMENT AND SIGNAL POLE LOCATION

Std. Dwg. No. **840**
Sheet 1 of 1

900
SURVEY
STANDARDS

CITY of NORCO STANDARD DRAWING

NOTES:

1. TIES SHALL BE DRAWN ON 8 ½" x 11" BOND OR EQUAL, (ORIGINAL TIE SHEETS MUST BE SUBMITTED TO THE CITY).
2. EACH SHEET SHALL SHOW THE FIRM NAME, L.S. OR R.C.E. NUMBER AND SEAL, TRACT NUMBER, DATE AND SHEET NUMBER.
3. THE FIRST SHEET SHALL BE AN INDEX MAP, SHOWING ALL STREETS WITH REFERENCE TO PAGE NUMBERS.
4. NORTH ARROW UP OR TO THE RIGHT (NEVER DOWN).
5. ALL TIE POINTS, (MINIMUM OF 4) SHALL BE LEAD AND TACK OR QUICK SET NAILS WITH WASHERS IN CURB, WHERE POSSIBLE.
6. ALL MEASUREMENTS FOR TIES SHALL BE TAKEN HORIZONTALLY.
7. WHERE CURVED STREETS ARE SHOWN ON TIE SHEETS, THE B.C.R., P.R.C., AND E.C.R. SHALL BE TIED OUT, AND THE CURVE DATA SHOWN ON THE SHEET, TOGETHER WITH THE DISTANCE TO THE NEAREST STREET TIE BEYOND EACH END OF SUBJECT CURVES.
8. ONLY ONE INTERSECTION OR CONTROL POINT SHALL BE SHOWN ON A SINGLE PAGE.
9. TIES WHICH HAVE BEEN SUBMITTED WILL BE REVIEWED BY ENGINEERING STAFF BEFORE A TRACT OR PROJECT MAY RECEIVE A FINAL RELEASE.

REVISION	NO:	BY:	DATE:	NO:	BY:	DATE:

12/22/04

APPROVED: Joseph S. Schenk 24039
CITY ENGINEER RCE

Drawn By: LJA Date: 3/19/04

CENTERLINE TIE REQUIREMENTS

Std. Dwg. No. **900**
Sheet 1 of 1

CITY of NORCO STANDARD DRAWING

NOTES:

1. ON CURVES WHERE THE P.I. FALLS OUTSIDE OF THE PAVED SECTION, MONUMENTS MAY BE SET AND TIED OUT ON SEMI-TANGENTS IN LIEU OF BC, EC AND MIDPOINT BEING SET AND TIED OUT. THESE MONUMENTS WILL BE SET WITHIN THE TRAVELED WAY.
2. o INDICATES 1" I.P. SET AT LOT CORNER AND USED AS TIE POINT FOR STREET CENTERLINE.
3. N INDICATES NUMBER OF TIE POINT.
4. MASONRY NAIL MAY BE SUBSTITUTED FOR LEAD & TACKS.
5. MIDPOINT IS NOT REQUIRED IF THE BC AND EC ARE SET AND THE CHORD LINE IS IN THE TRAVELED WAY.

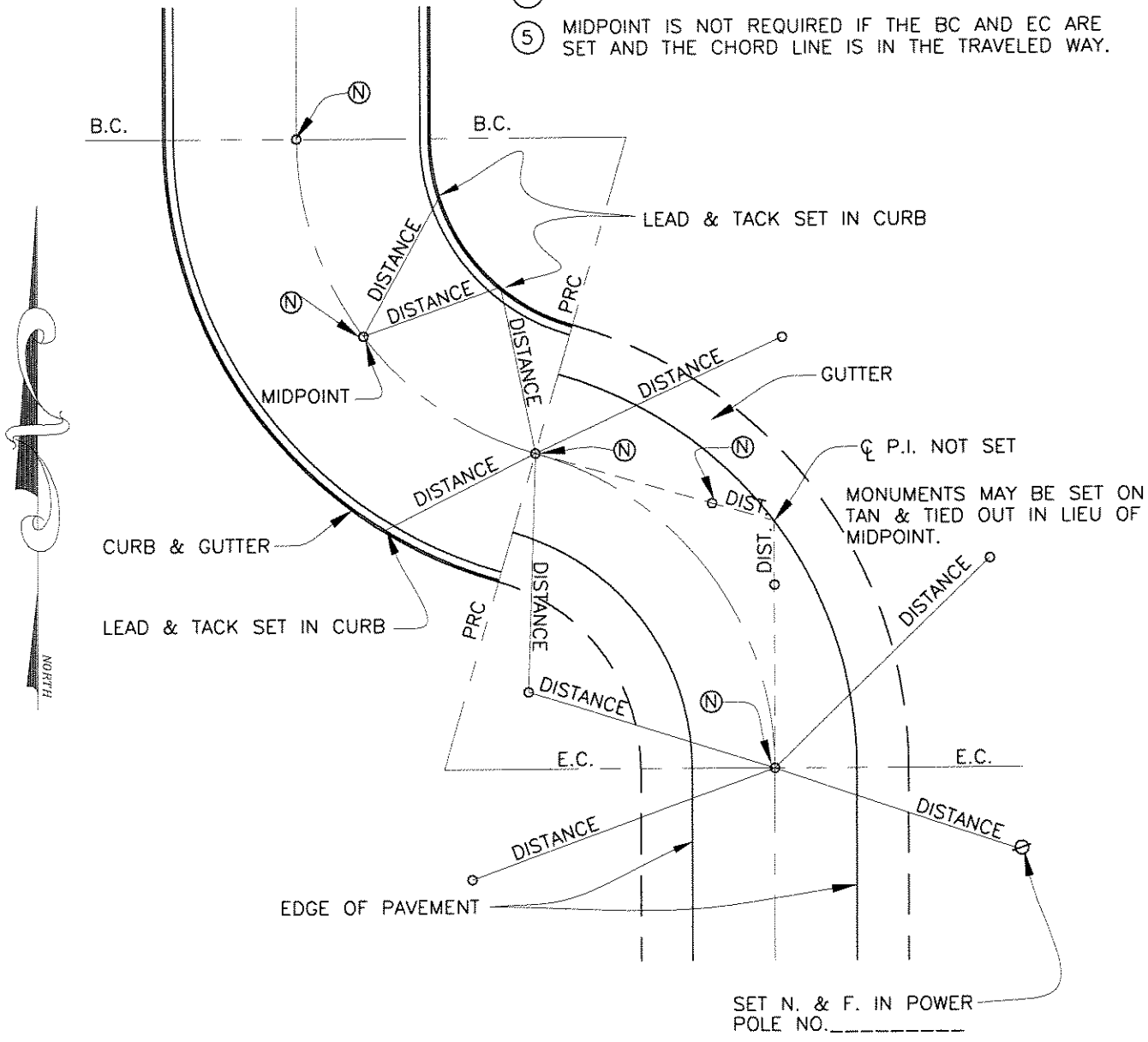

REVISION	NO:	BY:	DATE:	NO:	BY:	DATE:

12/28/04

APPROVED: Joseph S. Schunk 24039
CITY ENGINEER RCE

Drawn By: LJA Date: 07/14/04

STREET TIE LOCATIONS

Std. Dwg. No. **905A**
Sheet 1 of 1

CITY of NORCO STANDARD DRAWING

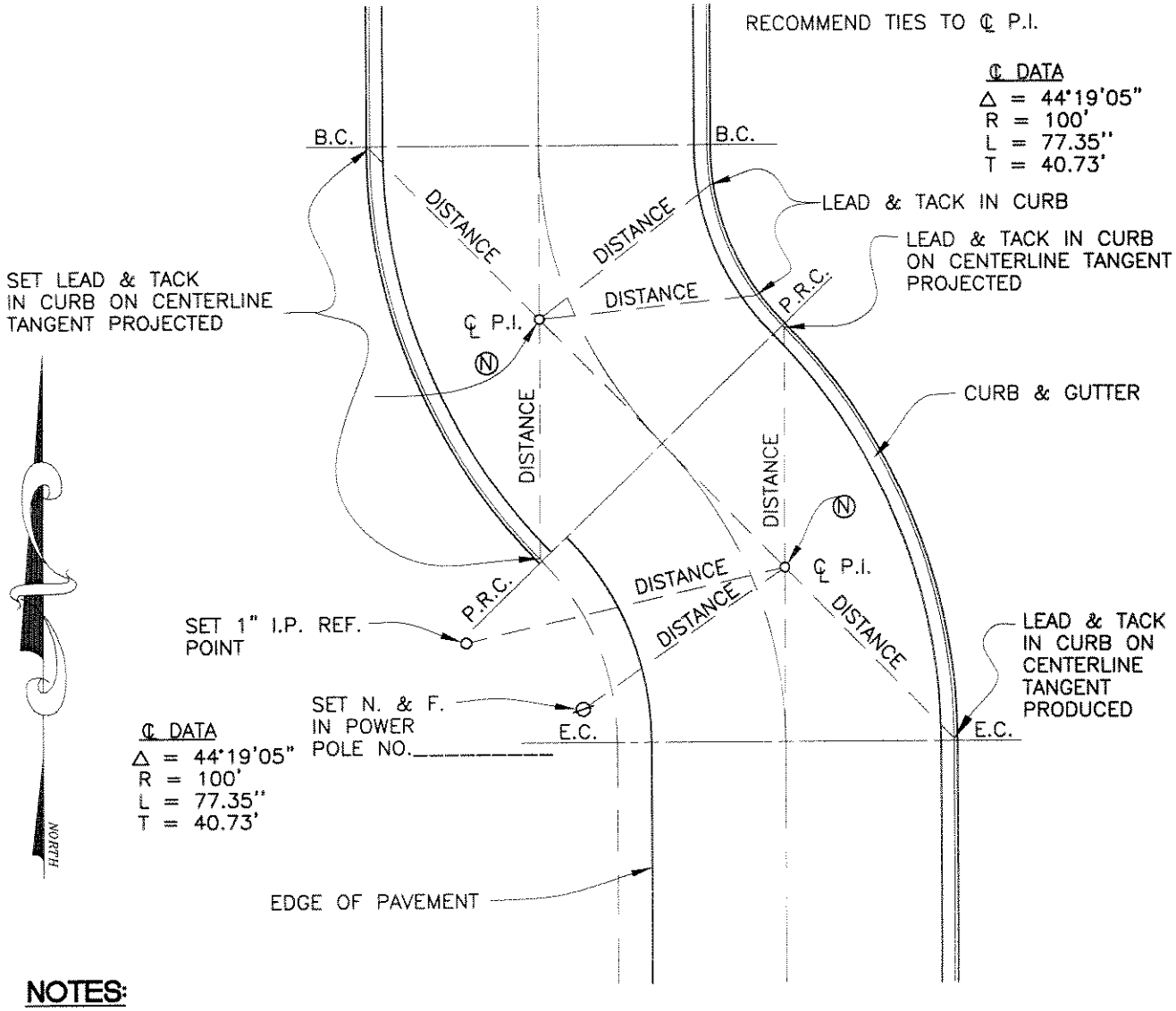

NOTES:

1. MASONRY NAIL MAY BE SUBSTITUTED FOR LEAD AND TACK.
2. N INDICATES NUMBER OF TIE POINT.

REVISION	NO:	BY:	DATE:	NO:	BY:	DATE:

12/22/04

APPROVED: Joseph D. Schenk 24039
CITY ENGINEER RCE

Drawn By: LJA Date: 07/14/04

STREET TIE LOCATIONS

Std. Dwg. No. 905B
Sheet 1 of 1

CITY of NORCO STANDARD DRAWING

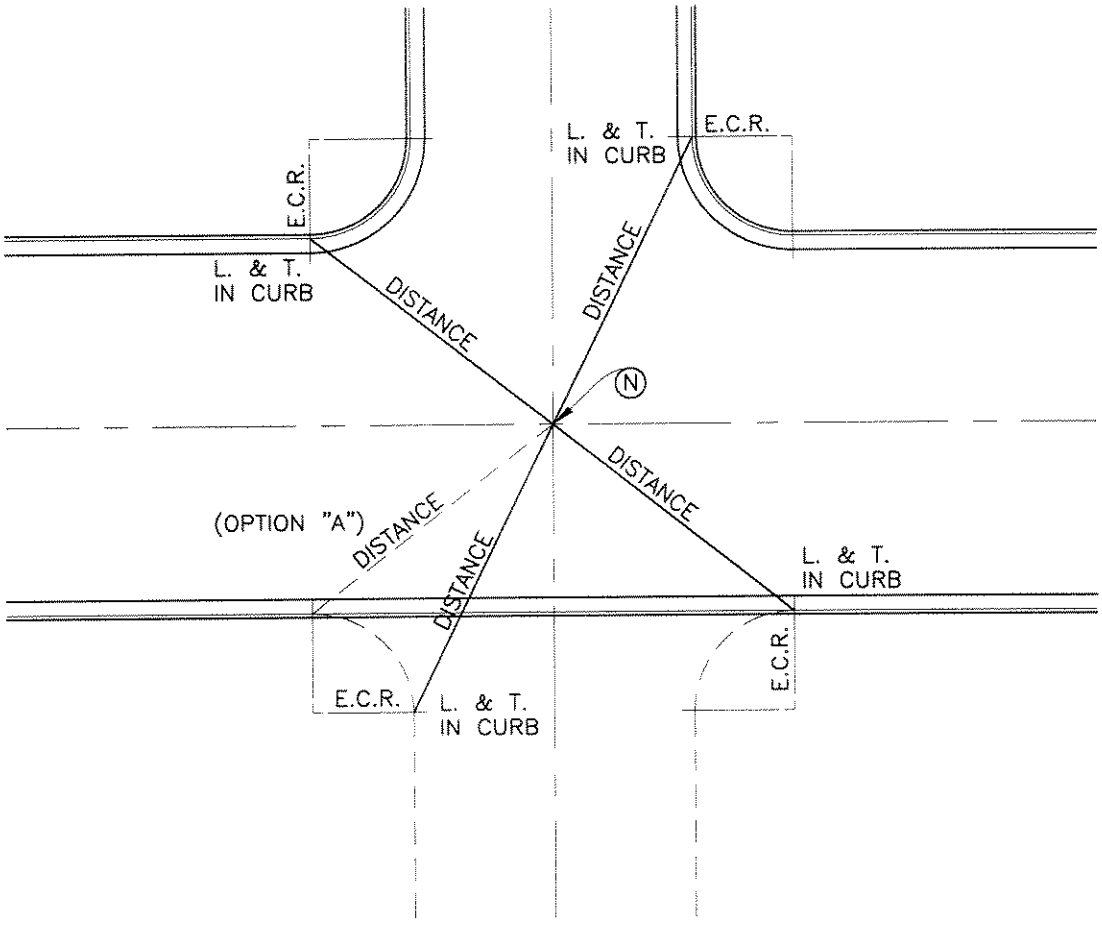

NOTES:

1. ALL TIE POINTS SHALL BE TIED OUT TO THE E.C.R.'S, EXCEPT IN THE CASE OF A TEE INTERSECTION, THEN OPTION "A" SHALL BE USED AS SHOWN ABOVE.
2. MASONARY NAIL MAY BE SUBSTITUTED FOR LEAD AND TACK.
3. 1" IRON PIPE (MINIMUM) WITH NAIL AND L.S. OR R.C.E. TAG SHALL BE USED FOR ALL STREET CENTERLINE INTERSECTION MONUMENTS.
4. (N) INDICATES NUMBER OF TIE POINT AS SHOWN ON SCHEDULE OF TIES.

REVISION	NO:	BY:	DATE:	NO:	BY:	DATE:

12/22/04

APPROVED: Joseph S. Schenk 24039
CITY ENGINEER RCE

Drawn By: LJA Date: 07/14/04

STREET TIE LOCATIONS

Std. Dwg. No.
905C
Sheet 1 of 1

CITY of NORCO STANDARD DRAWING

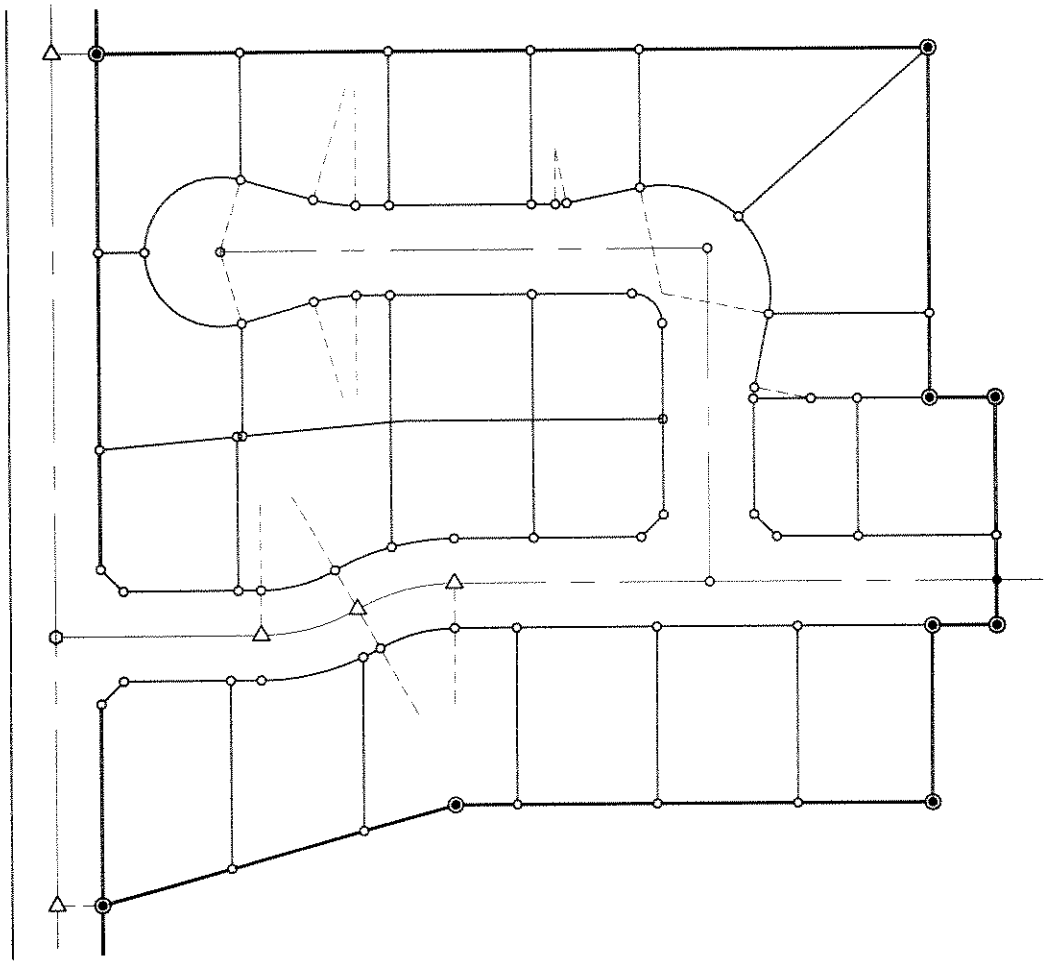

NOTES:

- • (1) INDICATES MONUMENT FOUND AS NOTED.
- ◉ (2) INDICATES SET 2" IRON PIPE WITH NAIL AND L.S. OR R.C.E. TAG.
- ∘ (3) INDICATES SET 1" IRON PIPE WITH NAIL AND L.S. OR R.C.E. TAG, UNLESS OTHERWISE NOTED. NAIL AND TAG MAY BE SET IN THE TOP OF CURB ON FRONT PROJECTION OF ALL SIDE LOT LINES IN LIEU OF 1" IRON PIPES.
- △ (4) INDICATES SET SPIKE AND WASHER STAMPED WITH L.S. OR R.C.E. NUMBER. 1" IRON PIPES WITH NAIL AND L.S. OR R.C.E. TAG MAY BE SET IN LIEU OF SPIKE AND WASHERS.

REVISION	NO:	BY:	DATE:	NO:	BY:	DATE:

12/22/04

APPROVED: Joseph S. Schenk 24039
CITY ENGINEER RCE

Drawn By: LJA Date: 3/19/04

STANDARD SUBDIVISION MONUMENTATION

Std. Dwg. No. **915A**
Sheet 1 of 1

CITY of NORCO STANDARD DRAWING

NOTES:

1. SEE STANDARD DRAWING NO. 900 FOR STREET TIE REQUIREMENTS.
2. THE SURVEYOR SHALL SET REQUIRED TRACT MAP AND PARCEL MAP MONUMENTS PRIOR TO THE FINAL MAP BEING RECORED, UNLESS SECURITY FOR THE SETTING OF MONUMENTS AT A LATER DATE HAS BEEN ACCEPTED BY THE CITY.
3. ALL MONUMENTS SHALL BE SET PRIOR TO ACCEPTANCE OF IMPROVEMENTS BY THE CITY.
4. NAIL AND TAG MAY BE SET IN THE TOP OF CURB ON FRONT PROJECTION OF ALL SIDE LOT LINES IN LIEU OF 1" IRON PIPES.
5. ON RESIDENTIAL SUBDIVISIONS, 1" IRON PIPES SHALL BE SET AT LOT CORNERS.

REVISION	NO:	BY:	DATE:	NO:	BY:	DATE:

12/22/04

APPROVED: Joseph S. Schenk 24039
CITY ENGINEER RCE

Drawn By: LJA Date: 4/19/04

SUBDIVISION MONUMENTATION NOTES

Std. Dwg. No. **915B**
Sheet 1 of 1